# EOC Normalien

## Nitrogen Gas Springs

PED 97/23/EC

CE

IIG ISO 9001

JAS-ANZ

# GAS SPRING


* MODEL
* NAME
* PAGE

* TSP SERIES
* GAS SPRING
* P8~31

* TSM SERIES
* GAS SPRING
* P32~47

* TSS SERIES
* GAS SPRING
* P48~57

* TSL SERIES
* GAS SPRING
* P58~73

* PAN3
* CONTROL PANEL
* P74

* PAN6
* CONTROL PANEL
* P75

* PSS
* MULTI PANEL
* P76

* HB10.CB4.CB12
* DISTRIBUTION BLOCK
* P77

* COMPACT FITTING
* FITTING
* P78

* GF FITTING
* FITTING
* P79

* VF FITTING
* FITTING
* P80

* CHARGING DATA
* FITTING
* P81

* ACCUMULATOR
* PRESSURE DISPERSION TANK
* P82

* HOSE MANUAL
* FITTING
* P83

* FITTING EXAMPLE I,II
* FITTING
* P84~85

* CHARGING
* ACCESSARIES
* P86

* REPAIR TOOL
* TOOLS
* P87

* PIPING CHANGE PROCEDURE
* GAS SPRING
* P88

**TECHNICAL DATA**

* TECHNICAL DATA
* GAS SPRING
* P89~90


22/03/2011

## Info

Installation and operation

When installing the ***DME*** gas spring, the piston rods of the gas springs must be installed parallel to the operation direction and vertical to the installation ground. Failure to do so will result in the generation of odd load and abrasion of piston rods, bearings, and seals etc., which will reduce the life span of the gas spring.

To prevent damage to the gas spring and to maximize its life span, please allow 10% margin to the standard stroke to reduce shock that is caused by the compression of gas. The margin can prevent damage on the gas spring when the piston rod touches the bottom surface and shortening a lifespan due to the impact by maximum gas pressure.

**Warning**
With gas spring fully charged with high pressure gas, non-compliance with this warning may lead to accidents , product damages , malfunctions , etc . Before using the spring , make sure to fully understand and observe the warning below.

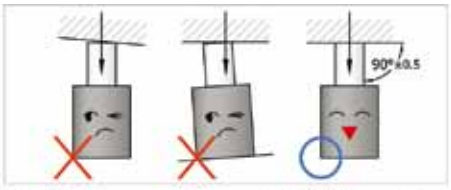


1. Install the gas spring parallel to the working direction and void of inclined or lateral load.

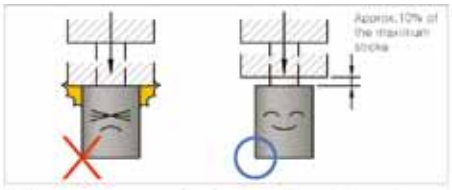

2. It may cause gas leakage or the piston rod not to return if gas spring is used exceeding the range of stroke length.

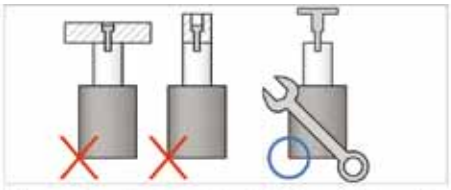

3. Do not use the Tap hole at the top of the rod for purpose other than repair and maintenance.

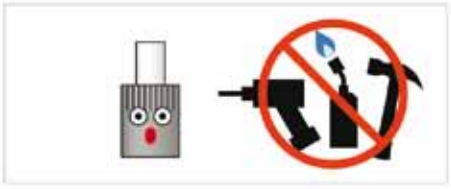

4. Do not cut, weld, heat to the main body.

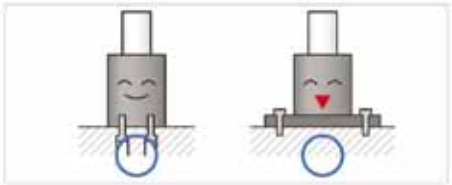

5. Unless, gas spring is secured by bolts, bottom base will be loosened.

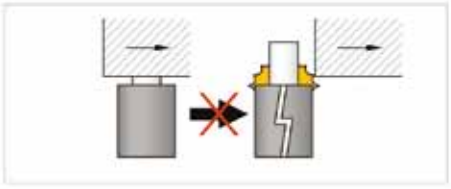

6. Avoid using the spring in a setting that it is released of the piston rod.

7. In disposing of gas spring, Be sure that $N_2$ Gas spring has completely escaped. Please keep disposition procedure.

8. Keep gas spring from fluid.

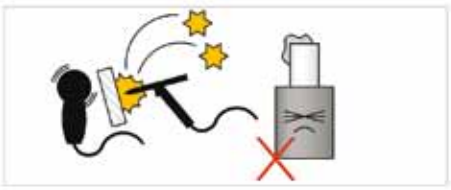

9. For mold lapping and polishing, exercise caution against the adhesion of welding sparks, scraps, metallic contaminants, etc.

22/03/2011

Model

## Info

EOC gas springs are available from 500N to 100,000N of initial force and from 10mm to 300mm of stroke.
Depending on total length, EOC Normalien gas springs provide a wide range to choose from TSP , TSM , TSS and TSL series, and they are easy to use in small molds.
Also, EOC Normalien gas springs are available for self contained type, individually used as an independent gas spring, and fitting system type, multiple gas springs that is connected by pipes to adjust gas pressure simultaneously for each gas spring. Conversion between those two types is possible.
Recharging and discharging are simple and pressure can be adjusted easily.
The maximum gas pressure for each model can be 150~180 bar.

## System types

**Self-contained type**
Already charged when shipped, it can be easily used, as it does not need extra space for installation of other parts. It may be discharged and recharged with a maximum charging pressure of 150~180 bar.

**Self-contained type**
Hoses connect with a few gas springs together and each gas spring can be simultaneously charged and discharged. They are easily handled during operations as the control panel controls pressure for each gas spring. The maximum charging pressure is 150 bar.

22/03/2011

## Info

Certificate Status

PED
97/23/EC

1. SYSTEM
As EOC Normalien GAS SPRINGS are produced and controlled by a system of international standard. Quality places as PED , ( European pressurized Module A1 ), ISO (Quality control system) and CE (Product Certificate).

2. Product Line-up
EOC Normalien gas springs provide a wide range to choose from 4 kinds of standards (TSP, TSM, TSS and TSL series), and more than 1,700 models are available.

3. Product Assessment
EOC Normalien Gas springs are exported to more than 30 countries and plans to expand our market abroad with a solid quality, fast delivery and good service.

4. Warranty
All EOC Normalien gas springs come with a two-year warranty form date of loading from the warehouse or 0.3 ~ 1 million strokes, depending on model.

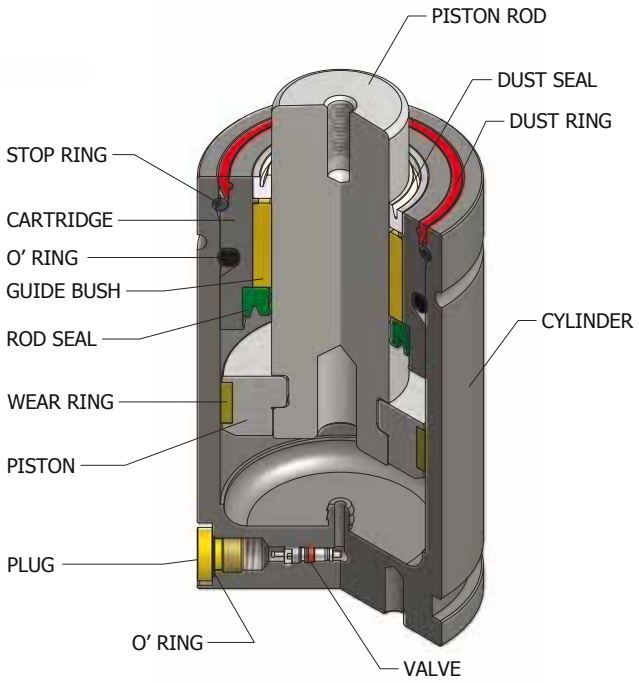


TSM, TSS, TSL

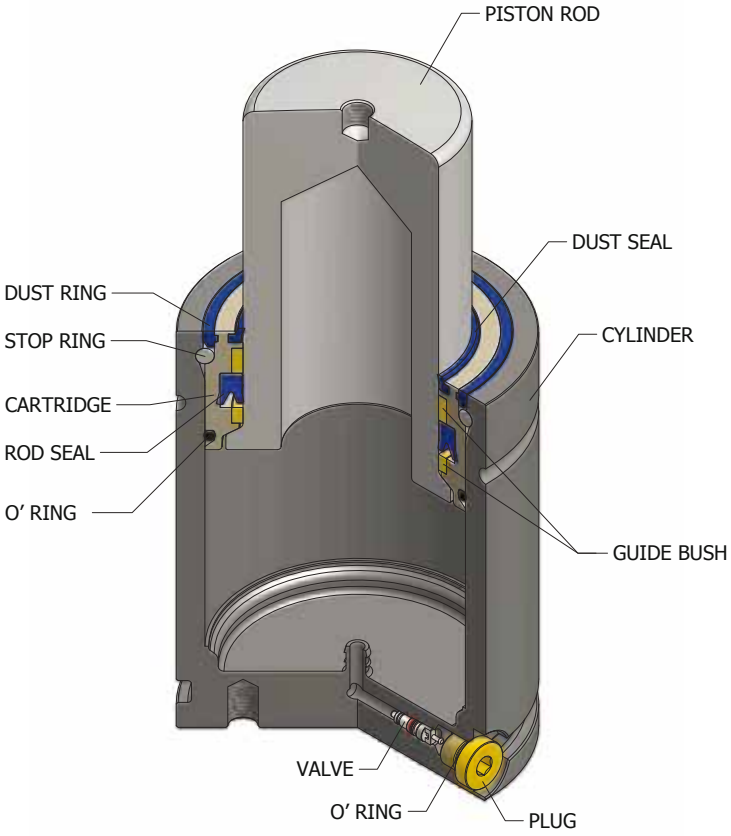


TSP

22/03/2011

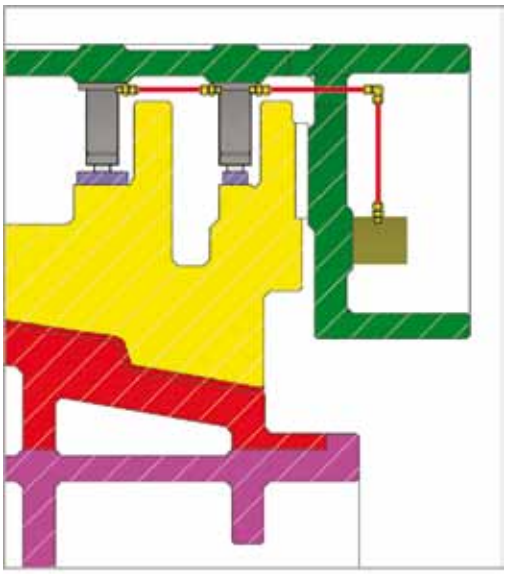

UPPER PAD FITTING TYPE

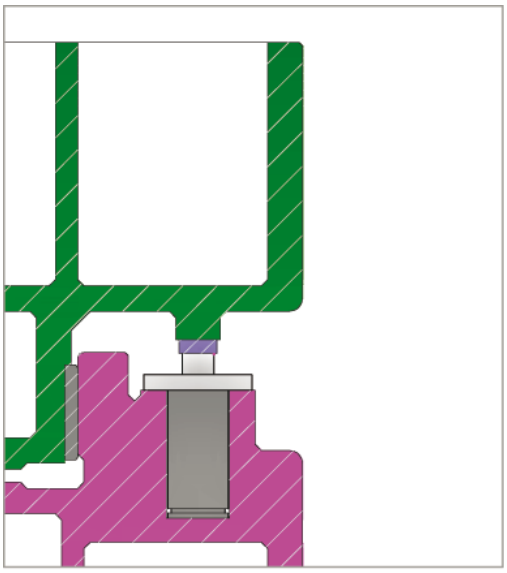

UPPER.LOWER MOLD
LOADING TYPE

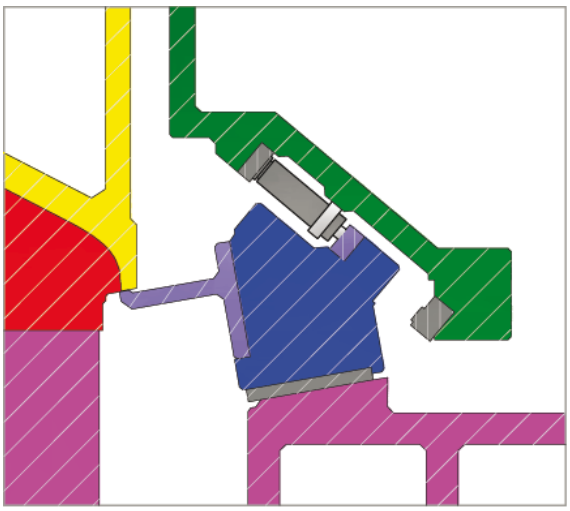

CAM RETURN TYPE

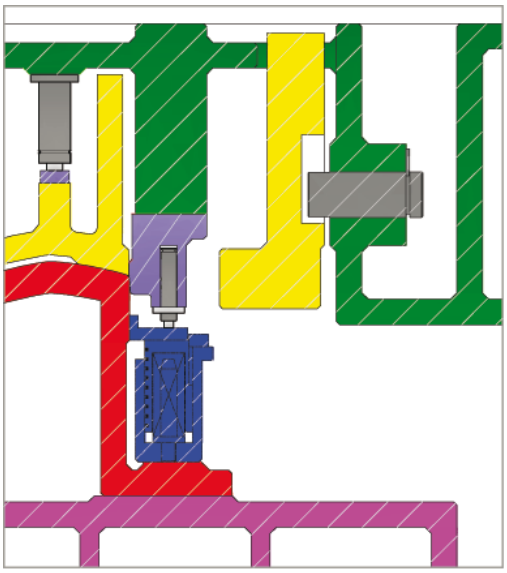

UPPER PAD TYPE
FL LIFTER PRECEDENCE
PRESSING TYPE

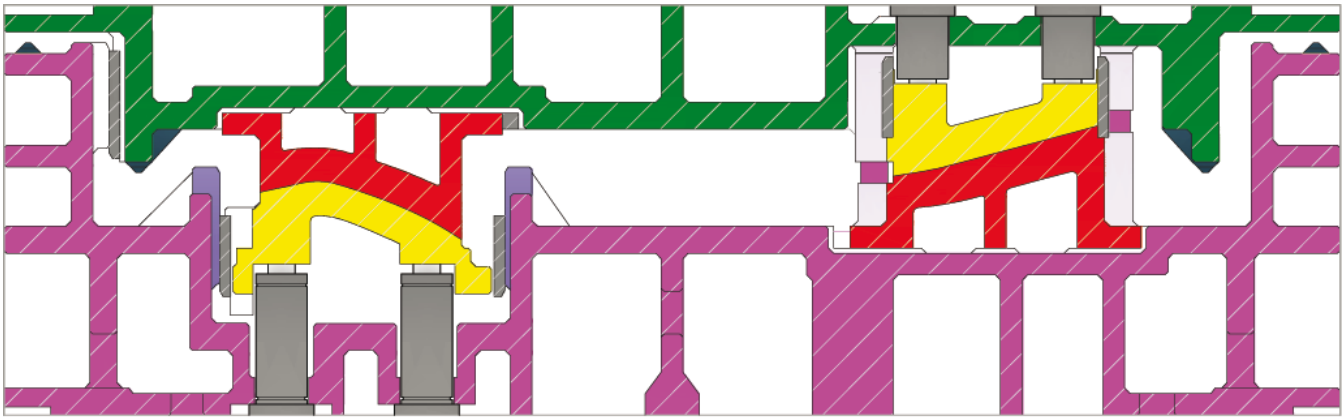

DRAW S/A TYPE

22/03/2011

# EOC Normalien

## TSP Series

PED 97/23/EC

CE

ISO 9001

JAS-ANZ

www.eoc.de

22/03/2011

CONTENTS

# TSP-SERIES

TSP0170 . . . . . . . . . . . . . . .
TSP0320 . . . . . . . . . . . . . . .
TSP0350 . . . . . . . . . . . . . . .
TSP0500 . . . . . . . . . . . . . . .
TSP0750 . . . . . . . . . . . . . . .
TSP1000 . . . . . . . . . . . . . . .
TSP1500 . . . . . . . . . . . . . . .
TSP2400 . . . . . . . . . . . . . . .
TSP4200 . . . . . . . . . . . . . . .
TSP6600 . . . . . . . . . . . . . . .
TSP9500 . . . . . . . . . . . . . . .

## XTRA HIGH POWER

### MODEL

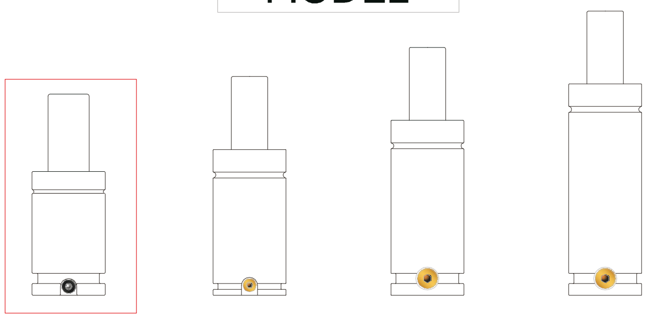

TSP TSM TSS TSL

### General Specification

- Filling Materials
  Nitrogen GAs(N2)
- Maximum Filling Pressure
  150~180 bar (at 20℃)
- Minimum Filling Pressure
  25 bar (at 20℃)
- Operation Temperature
  -5 to 80℃
- Pressure Increase as per Temperature
  ±0.3% / ℃
- Maximum Stroke Rate Per Minute (Recommended)
  ~50 to 100 (at 20℃)
- Piston Rod Speed
  0.03~0.8 m/s
- Rod Surface Treatment
  Nitrate Coating
- Cylinder Surface Treatment
  Oxidized Black Coating

### Specification

| TYPE | Stroke (mm) | Cylinder Diameter Φ(mm) | Rod Φ(mm) | Initial Force (N) | End Force (N) | MAX. Charging Pressure |
|---|---|---|---|---|---|---|
| TSP0170 | 7~125 | 19 | 11 | 1,700 | 2,800 | 180Bar |
| TSP0320 | 7~125 | 25 | 15 | 3,200 | 5,500 | 180Bar |
| TSP0350 | 10~125 | 32 | 16 | 3,600 | 5,400 | 180Bar |
| TSP0500 | 10~125 | 38 | 20 | 4,700 | 7,200 | 150Bar |
| TSP0750 | 10~125 | 45 | 25 | 7,400 | 11,700 | 150Bar |
| TSP1000 | 13~125 | 50 | 28 | 9,200 | 14,900 | 150Bar |
| TSP1500 | 13~125 | 63 | 36 | 15,200 | 24,100 | 150Bar |
| TSP2400 | 16~125 | 75 | 45 | 23,800 | 38,400 | 150Bar |
| TSP4200 | 16~125 | 95 | 60 | 42,200 | 70,900 | 150Bar |
| TSP6600 | 16~125 | 120 | 75 | 66,000 | 108,700 | 150Bar |
| TSP9500 | 20~125 | 150 | 90 | 95,000 | 149,100 | 150Bar |

※ The above specification is subject to change without notice for performance improvement.

PED 97/23/2C

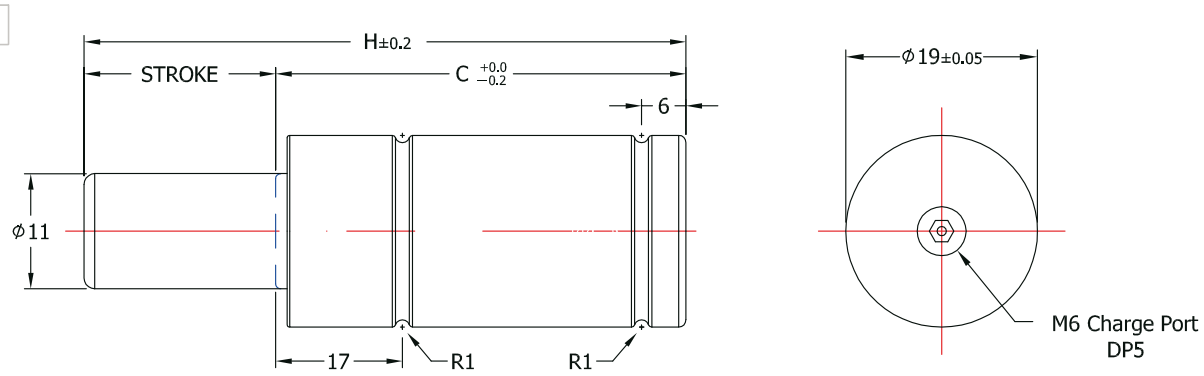


## HOW TO SPECIFY

| | | | | | |
|---|---|---|---|---|---|
| GAS SPRING | TSP0170 (MODEL) | × | 050 (STROKE) | – | 180 (CHARGING PRESSURE (Bar)) |
| MOUNT | XP0170 | | | | |
| REPAIR KIT | Non-repairable | | | | |

[Caution!] Charging pressure has to be specified. Otherwise, 180Bar will be charged.

**TSP0170**

| Stroke (mm) | Stroke (inch) | H | C | Force(N) (180 bar / +20℃) Initial | Force(N) (180 bar / +20℃) End force* | Gas vol. (cm³) | Weight (kg) |
|---|---|---|---|---|---|---|---|
| 7 | 0.28 | 44 | 37 | 1,700 | 2,500 | 2.2 | 0.06 |
| 10 | 0.39 | 50 | 40 | | 2,500 | 2.9 | 0.06 |
| 13 | 0.51 | 56 | 43 | | 2,600 | 3.6 | 0.07 |
| 16 | 0.63 | 62 | 46 | | 2,600 | 4.4 | 0.07 |
| 20 | 0.79 | 70 | 50 | | 2,700 | 5.3 | 0.08 |
| 25 | 0.98 | 80 | 55 | | 2,700 | 6.5 | 0.08 |
| 30 | 1.18 | 90 | 60 | | 2,700 | 7.7 | 0.09 |
| 35 | 1.38 | 100 | 65 | | 2,700 | 8.9 | 0.10 |
| 38 | 1.50 | 106 | 68 | | 2,700 | 9.6 | 0.11 |
| 40 | 1.57 | 110 | 70 | | 2,700 | 10.1 | 0.11 |
| 45 | 1.77 | 120 | 75 | | 2,800 | 11.3 | 0.12 |
| 50 | 1.97 | 130 | 80 | | 2,800 | 12.5 | 0.12 |
| 60 | 2.36 | 150 | 90 | | 2,800 | 14.9 | 0.14 |
| 63 | 2.48 | 156 | 93 | | 2,800 | 15.6 | 0.14 |
| 70 | 2.76 | 175 | 105 | | 2,800 | 17.3 | 0.15 |
| 75 | 2.95 | 185 | 110 | | 2,800 | 18.5 | 0.15 |
| 80 | 3.15 | 195 | 115 | | 2,800 | 19.7 | 0.16 |
| 90 | 3.54 | 215 | 125 | | 2,800 | 22.1 | 0.18 |
| 100 | 3.94 | 235 | 135 | | 2,800 | 24.5 | 0.20 |
| 125 | 4.92 | 285 | 160 | | 2,800 | 30.4 | 0.22 |

* = at full stroke

### ■ CHARGING PRESSURE/FORCE INCREASE FACTOR

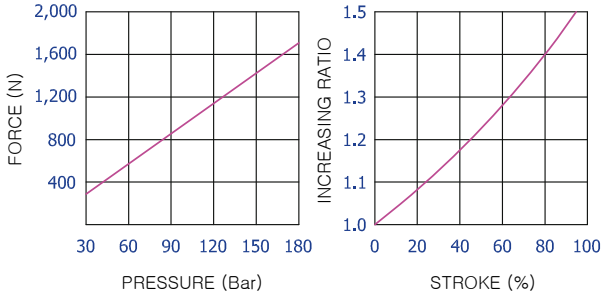


### ■ Calculation of charging pressure for TSP0170

$$\text{Charging pressure(Bar)} = \frac{\text{Initial Force(N)}}{9.5}$$

ex) What comes to the charging pressure of gas spring which demands force 1,000N?

$$105\text{(Bar)} = \frac{1{,}000\text{(N)}}{9.5}$$

22/03/2011

## XG0170 MOUNT

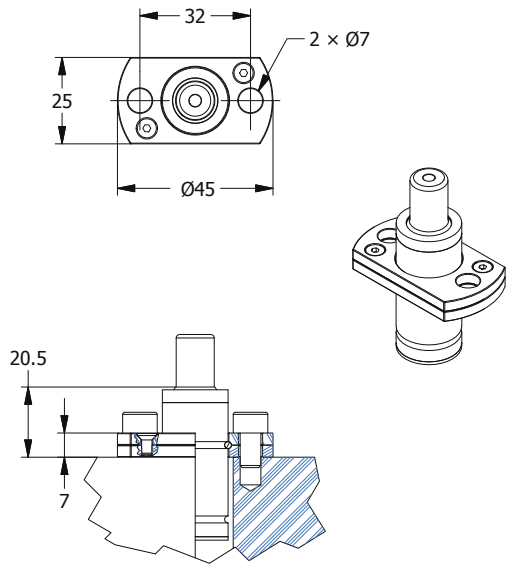


## XC0170 MOUNT

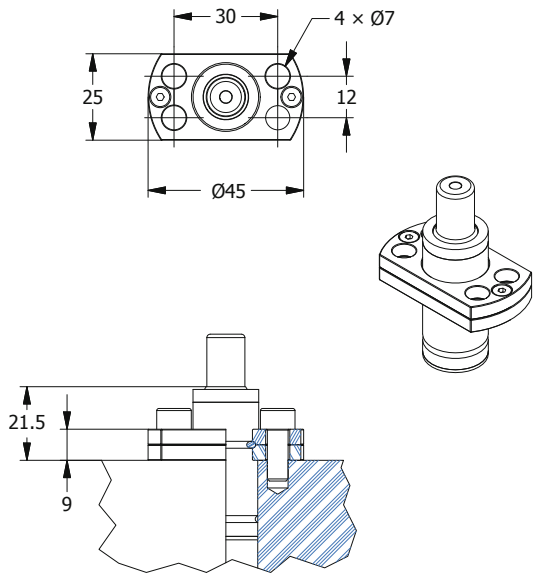


## XP0170 MOUNT

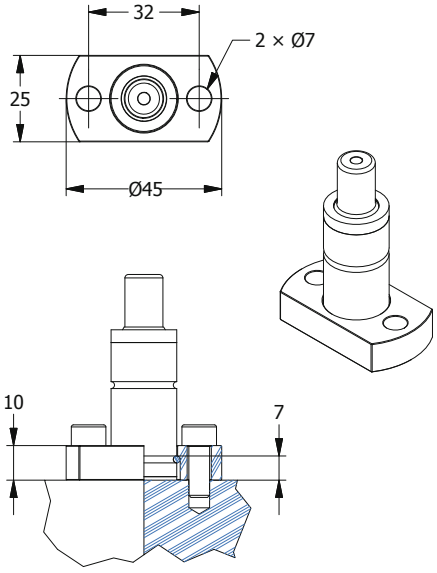


22/03/2011

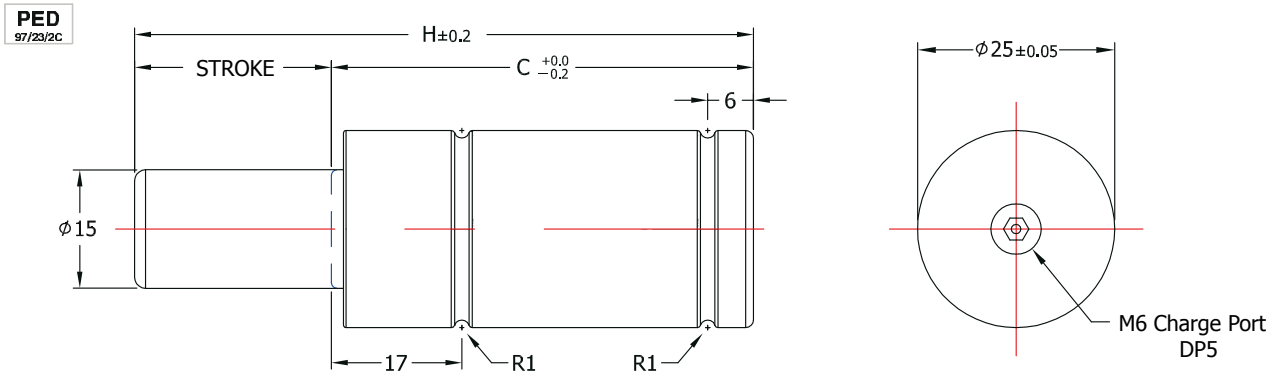


## HOW TO SPECIFY

GAS SPRING TSP0320 (MODEL) × 050 (STROKE) — 180 (CHARGING PRESSURE (Bar))

MOUNT XP0320

REPAIR KIT Non-repairable

[Caution!] Charging pressure has to be specified. Otherwise, 180Bar will be charged.

| TSP0320 | | | | | | | |
|---|---|---|---|---|---|---|---|
| Stroke | | H | C | Force(N) ( 180 bar / +20℃ ) | | Gas vol. (㎤) | Weight (kg) |
| (㎜) | (inch) | | | Initial | End force* | | |
| 7 | 0.28 | 44 | 37 | 3,200 | 5,000 | 3.7 | 0.09 |
| 10 | 0.39 | 50 | 40 | | 5,000 | 4.9 | 0.11 |
| 13 | 0.51 | 56 | 43 | | 5,100 | 6.2 | 0.11 |
| 16 | 0.63 | 62 | 46 | | 5,200 | 7.4 | 0.12 |
| 20 | 0.79 | 70 | 50 | | 5,200 | 9.0 | 0.14 |
| 25 | 0.98 | 80 | 55 | | 5,300 | 11.1. | 0.15 |
| 30 | 1.18 | 90 | 60 | | 5,300 | 13.1 | 0.16 |
| 35 | 1.38 | 100 | 65 | | 5,400 | 15.2 | 0.18 |
| 38 | 1.50 | 106 | 68 | | 5,400 | 16.4 | 0.18 |
| 40 | 1.57 | 110 | 70 | | 5,400 | 17.2 | 0.19 |
| 45 | 1.77 | 120 | 75 | | 5,400 | 19.3 | 0.21 |
| 50 | 1.97 | 130 | 80 | | 5,400 | 21.3 | 0.22 |
| 60 | 2.36 | 150 | 90 | | 5,500 | 25.4 | 0.25 |
| 63 | 2.48 | 156 | 93 | | 5,500 | 26.6 | 0.26 |
| 70 | 2.76 | 175 | 105 | | 5,500 | 29.5 | 0.28 |
| 75 | 2.95 | 185 | 110 | | 5,500 | 31.6 | 0.28 |
| 80 | 3.15 | 195 | 115 | | 5,500 | 33.6 | 0.32 |
| 90 | 3.54 | 215 | 125 | | 5,500 | 37.7 | 0.33 |
| 100 | 3.94 | 235 | 135 | | 5,500 | 41.8 | 0.36 |
| 125 | 4.92 | 285 | 160 | | 5,500 | 52.0 | 0.43 |

* = at full stroke

### CHARGING PRESSURE/FORCE INCREASE FACTOR

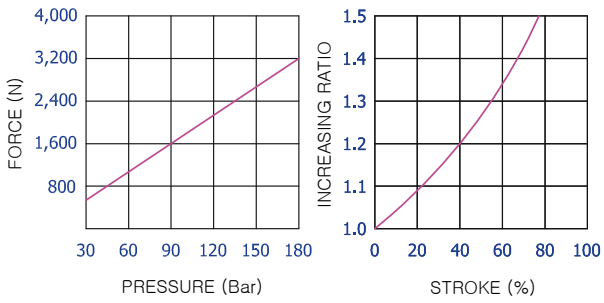


### Calculation of charging pressure for TSP0320

$$\text{Charging pressure(Bar)} = \frac{\text{Initial Force(N)}}{17.7}$$

ex) What comes to the charging pressure of gas spring which demands force 2,500N?

$$141\text{(Bar)} = \frac{2{,}500\text{(N)}}{17.7}$$

22/03/2011

## XR0320(SR0150) MOUNT

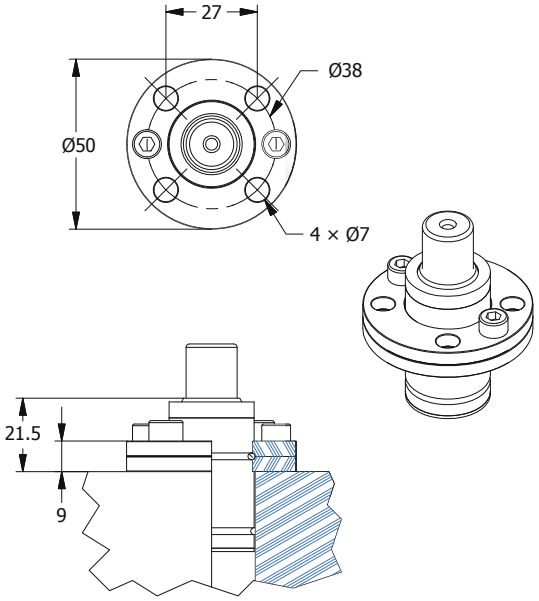


## XB0320(SB0150) MOUNT

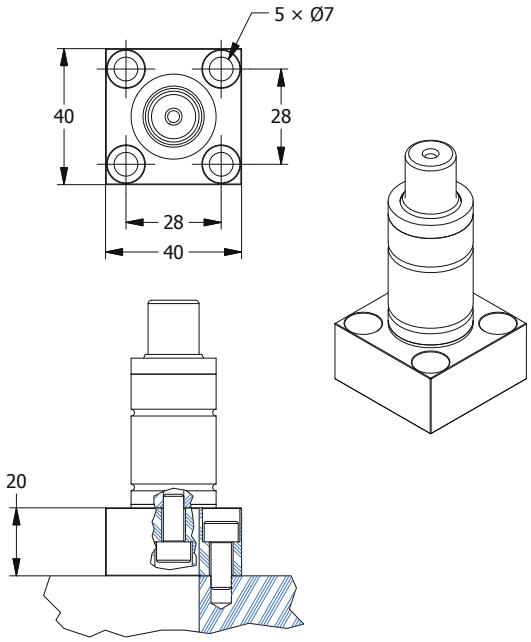


## XG0320(SG0150) MOUNT

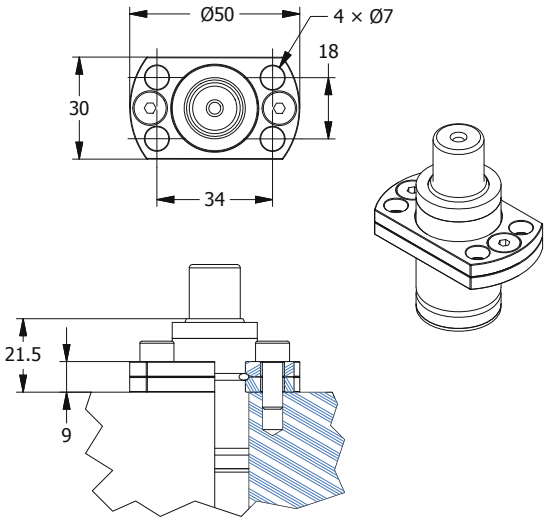

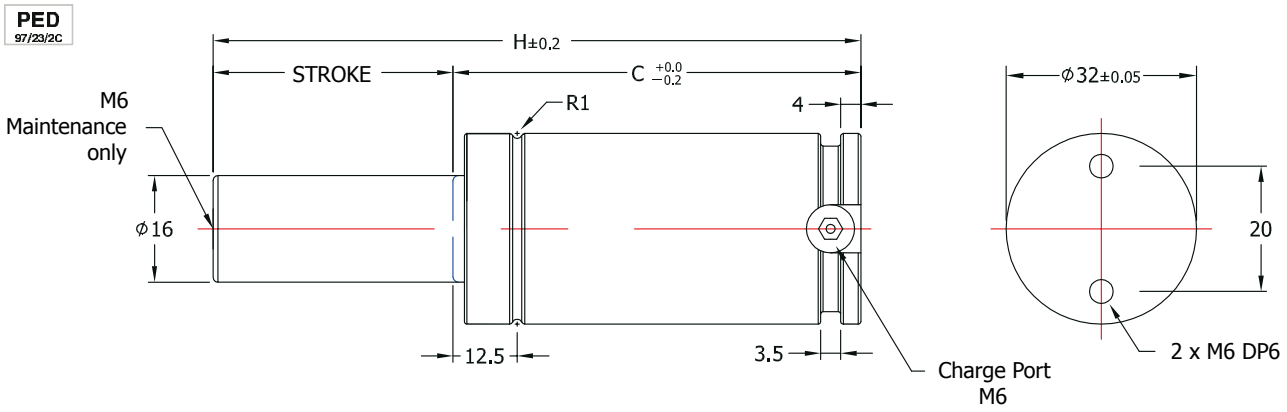


## HOW TO SPECIFY

| | | | | | | | | |
|---|---|---|---|---|---|---|---|---|
| GAS SPRING | TSP0350 | × | 050 | S(F) | — | 180 |
| | MODEL | | STROKE | SELF CONTAINED-S FITTING-SYSTEM-F | | CHARGING PRESSURE (Bar) |
| MOUNT | XP0350 | | | | | |
| REPAIR KIT | RCX0350 | | | | | |

[Caution!] Charging pressure has to be specified. Otherwise, 180Bar will be charged.

**TSP0350**

| Stroke | | H | C | Force(N) ( 180 bar / +20℃ ) | | Gas vol. (㎤) | Weight (kg) |
|---|---|---|---|---|---|---|---|
| (㎜) | (inch) | | | Initial | End force* | | |
| 10 | 0.39 | 50 | 40 | | 5,000 | 7.2 | 0.20 |
| 13 | 0.51 | 56 | 43 | | 5,100 | 9.0 | 0.21 |
| 16 | 0.63 | 62 | 46 | | 5,200 | 10.8 | 0.21 |
| 20 | 0.79 | 70 | 50 | | 5,200 | 13.3 | 0.23 |
| 25 | 0.98 | 80 | 55 | | 5,200 | 16.3 | 0.25 |
| 30 | 1.18 | 90 | 60 | | 5,300 | 19.4 | 0.26 |
| 35 | 1.38 | 100 | 65 | | 5,300 | 22.4 | 0.28 |
| 38 | 1.50 | 106 | 68 | | 5,300 | 24.2 | 0.29 |
| 40 | 1.57 | 110 | 70 | | 5,300 | 25.4 | 0.29 |
| 45 | 1.77 | 120 | 75 | 3,600 | 5,300 | 28.5 | 0.32 |
| 50 | 1.97 | 130 | 80 | | 5,300 | 31.5 | 0.33 |
| 60 | 2.36 | 150 | 90 | | 5,300 | 37.6 | 0.37 |
| 63 | 2.48 | 156 | 93 | | 5,300 | 39.5 | 0.37 |
| 70 | 2.76 | 170 | 100 | | 5,300 | 43.7 | 0.40 |
| 75 | 2.95 | 180 | 105 | | 5,300 | 46.8 | 0.41 |
| 80 | 3.15 | 190 | 110 | | 5,300 | 49.8 | 0.43 |
| 90 | 3.54 | 210 | 120 | | 5,300 | 55.9 | 0.46 |
| 100 | 3.94 | 230 | 130 | | 5,400 | 62.5 | 0.49 |
| 125 | 4.92 | 280 | 155 | | 5,400 | 77.2 | 0.58 |

* = at full stroke

### ■ CHARGING PRESSURE/FORCE INCREASE FACTOR

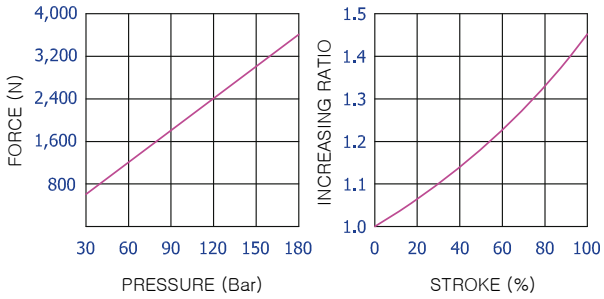


### ■ Calculation of charging pressure for TSP0350

$$\text{Charging pressure(Bar)} = \frac{\text{Initial Force(N)}}{20.1}$$

ex) What comes to the charging pressure of gas spring which demands force 3,300N?

$$164\text{(Bar)} = \frac{3{,}300\text{(N)}}{20.1}$$

22/03/2011

## XP0350 MOUNT

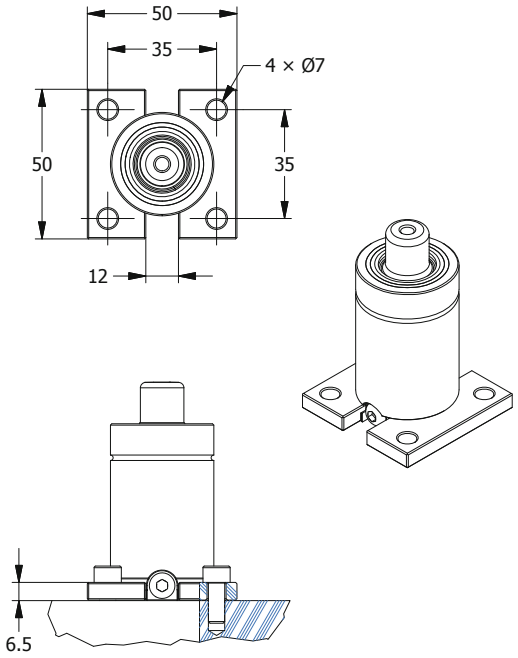


## XR0350 MOUNT

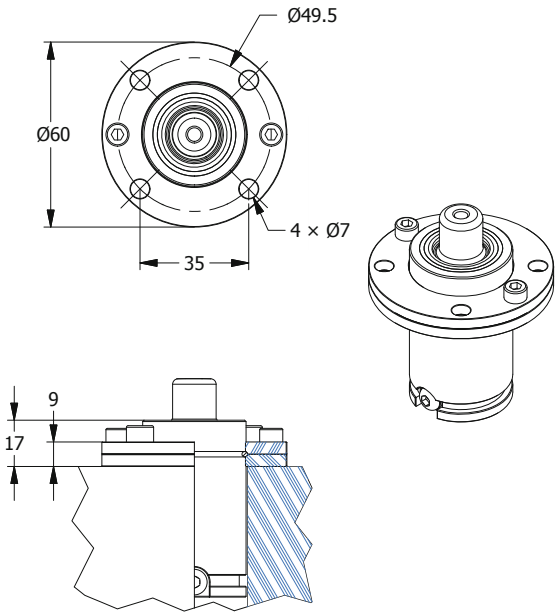


22/03/2011

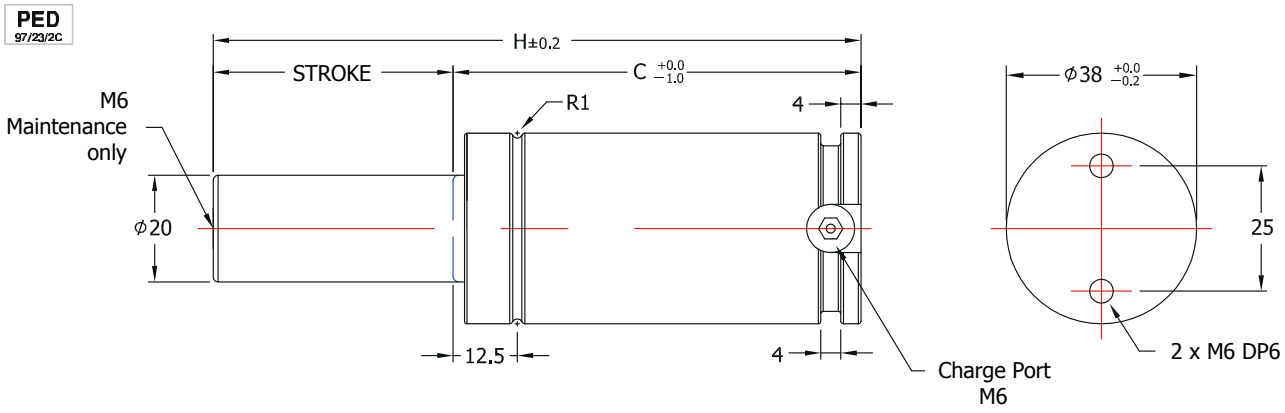


## HOW TO SPECIFY

| | | | | | | | |
|---|---|---|---|---|---|---|---|
| GAS SPRING | TSP0500 | × | 050 | S(F) | — | 150 |
| | MODEL | | STROKE | SELF CONTAINED-S FITTING-SYSTEM-F | | CHARGING PRESSURE (Bar) |
| MOUNT | XP0500 | | | | | |
| REPAIR KIT | RCX0500 | | | | | |

[Caution!] Charging pressure has to be specified. Otherwise, 150Bar will be charged.

| TSP0500 | | | | | | | |
|---|---|---|---|---|---|---|---|
| Stroke | | H | C | Force(N) ( 150 bar / +20℃ ) | | Gas vol. (㎤) | Weight (kg) |
| (㎜) | (inch) | | | Initial | End force* | | |
| 10 | 0.39 | 50 | 40 | 4,700 | 6,700 | 10.4 | 0.26 |
| 13 | 0.51 | 56 | 43 | | 6,800 | 13.1 | 0.28 |
| 16 | 0.63 | 62 | 46 | | 6,900 | 15.7 | 0.29 |
| 20 | 0.79 | 70 | 50 | | 7,000 | 19.3 | 0.31 |
| 25 | 0.98 | 80 | 55 | | 7,000 | 23.7 | 0.33 |
| 30 | 1.18 | 90 | 60 | | 7,100 | 28.2 | 0.36 |
| 35 | 1.38 | 100 | 65 | | 7,100 | 32.6 | 0.38 |
| 38 | 1.50 | 106 | 68 | | 7,100 | 35.3 | 0.39 |
| 40 | 1.57 | 110 | 70 | | 7,100 | 37.0 | 0.41 |
| 45 | 1.77 | 120 | 75 | | 7,100 | 41.5 | 0.43 |
| 50 | 1.97 | 130 | 80 | | 7,200 | 45.9 | 0.46 |
| 60 | 2.36 | 150 | 90 | | 7,200 | 54.8 | 0.51 |
| 63 | 2.48 | 156 | 93 | | 7,200 | 57.4 | 0.52 |
| 70 | 2.76 | 170 | 100 | | 7,200 | 63.6 | 0.55 |
| 75 | 2.95 | 180 | 105 | | 7,200 | 68.1 | 0.57 |
| 80 | 3.15 | 190 | 110 | | 7,200 | 72.5 | 0.60 |
| 90 | 3.54 | 210 | 120 | | 7,200 | 81.4 | 0.65 |
| 100 | 3.94 | 230 | 130 | | 7,200 | 90.3 | 0.70 |
| 125 | 4.92 | 280 | 155 | | 7,200 | 112.4 | 0.82 |

* = at full stroke

### CHARGING PRESSURE/FORCE INCREASE FACTOR

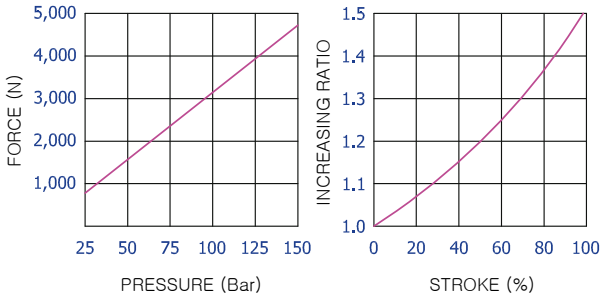


### Calculation of charging pressure for TSP0500

$$\text{Charging pressure(Bar)} = \frac{\text{Initial Force(N)}}{31.4}$$

ex) What comes to the charging pressure of gas spring which demands force 4,000N?

$$127\text{(Bar)} = \frac{4{,}000\text{(N)}}{31.4}$$

22/03/2011

## XP0500(SP0300) MOUNT

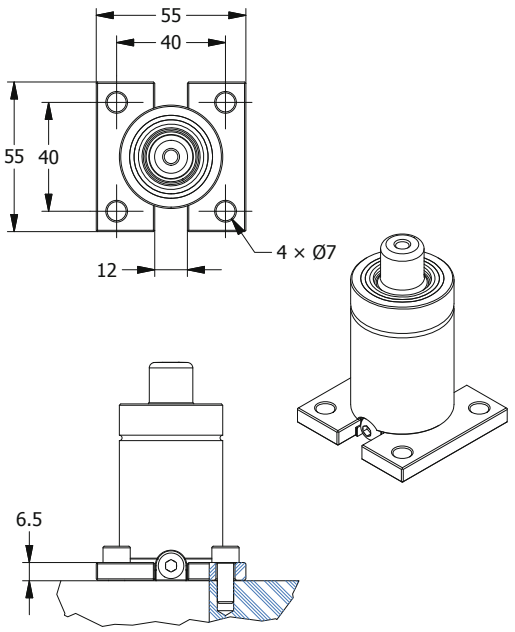


## XR0500(SR0300) MOUNT

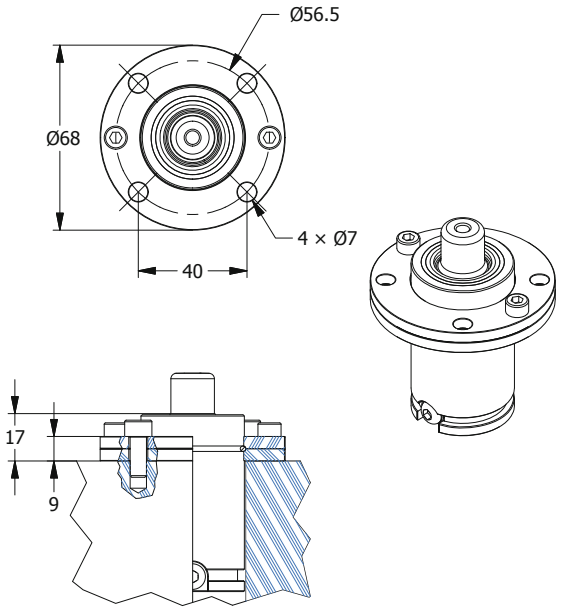


## XT0500(ST0300) MOUNT

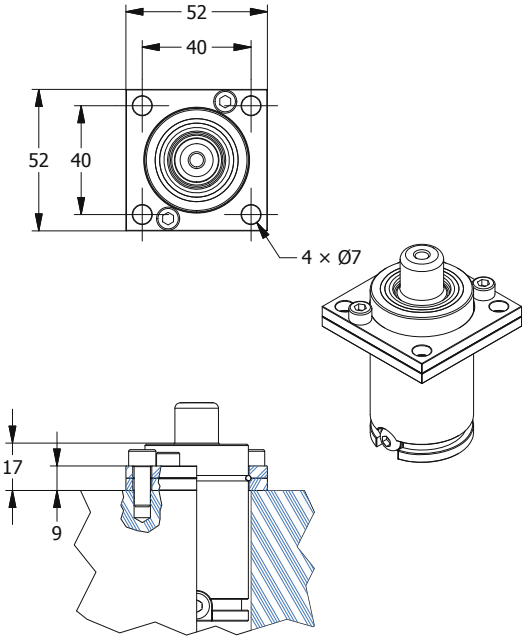


## XC0500(SC0300) MOUNT

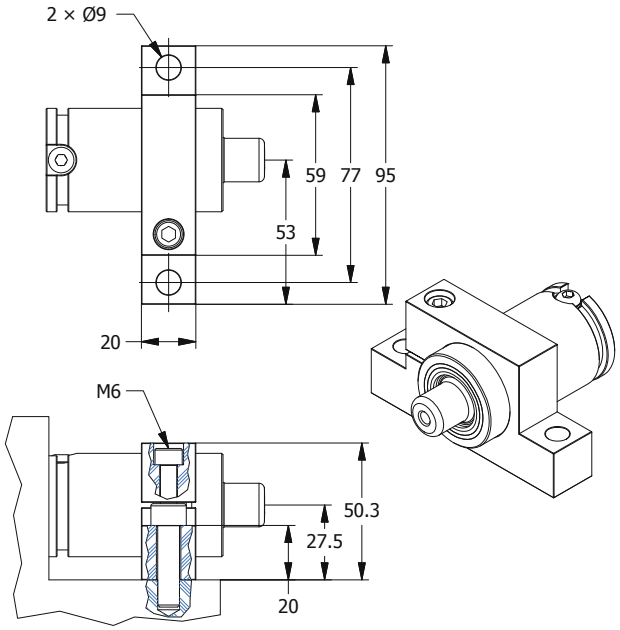


22/03/2011

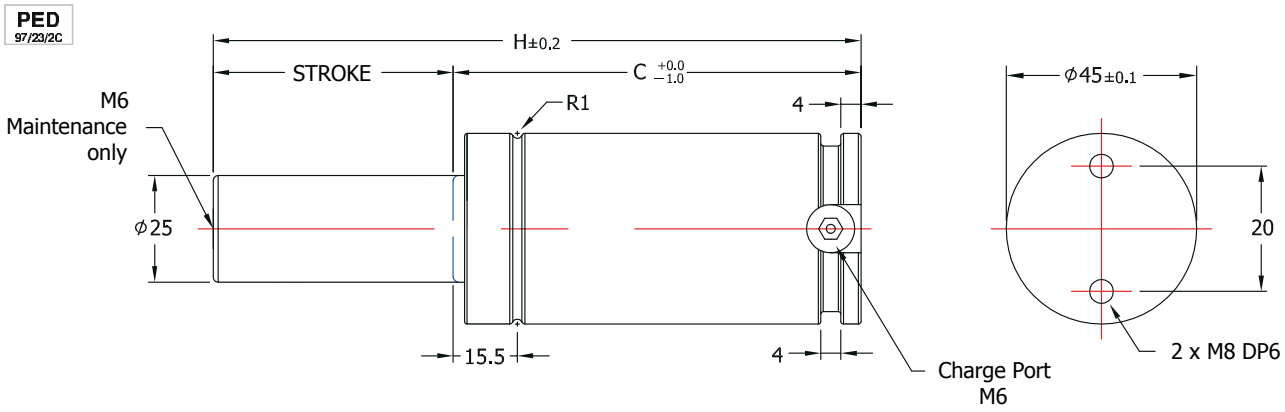


## HOW TO SPECIFY

| | | | | | | | | |
|---|---|---|---|---|---|---|---|---|
| GAS SPRING | TSP0750 | × | 050 | S(F) | — | 150 |
| | MODEL | | STROKE | SELF CONTAINED-S FITTING-SYSTEM-F | | CHARGING PRESSURE (Bar) |
| MOUNT | XP0750 | | | | | |
| REPAIR KIT | RCX0750 | | | | | |

[Caution!] Charging pressure has to be specified. Otherwise, 150Bar will be charged.

**TSP0750**

| Stroke | | H | C | Force(N) ( 150 bar / +20℃ ) | | Gas vol. (㎤) | Weight (kg) |
|---|---|---|---|---|---|---|---|
| (㎜) | (inch) | | | Initial | End force* | | |
| 10 | 0.39 | 52 | 42 | 7,400 | 10,600 | 15.9 | 0.40 |
| 13 | 0.51 | 58 | 45 | | 10,900 | 19.8 | 0.42 |
| 16 | 0.63 | 64 | 48 | | 11,000 | 23.7 | 0.44 |
| 20 | 0.79 | 72 | 52 | | 11,100 | 28.9 | 0.47 |
| 25 | 0.98 | 82 | 57 | | 11,300 | 35.4 | 0.50 |
| 30 | 1.18 | 92 | 62 | | 11,300 | 41.9 | 0.53 |
| 35 | 1.38 | 102 | 67 | | 11,400 | 48.4 | 0.56 |
| 38 | 1.50 | 108 | 70 | | 11,400 | 52.3 | 0.58 |
| 40 | 1.57 | 112 | 72 | | 11,400 | 55.0 | 0.59 |
| 45 | 1.77 | 122 | 77 | | 11,500 | 61.5 | 0.63 |
| 50 | 1.97 | 132 | 82 | | 11,500 | 68.0 | 0.66 |
| 60 | 2.36 | 152 | 92 | | 11,600 | 81.0 | 0.72 |
| 63 | 2.48 | 158 | 95 | | 11,600 | 84.9 | 0.74 |
| 70 | 2.76 | 172 | 102 | | 11,600 | 94.0 | 0.79 |
| 75 | 2.95 | 182 | 107 | | 11,600 | 100.5 | 0.82 |
| 80 | 3.15 | 192 | 112 | | 11,600 | 107.0 | 0.85 |
| 90 | 3.54 | 212 | 122 | | 11,600 | 120.0 | 0.92 |
| 100 | 3.94 | 232 | 132 | | 11,700 | 133.0 | 0.98 |
| 125 | 4.92 | 282 | 157 | | 11,700 | 165.6 | 1.14 |

* = at full stroke

### ■ CHARGING PRESSURE/FORCE INCREASE FACTOR

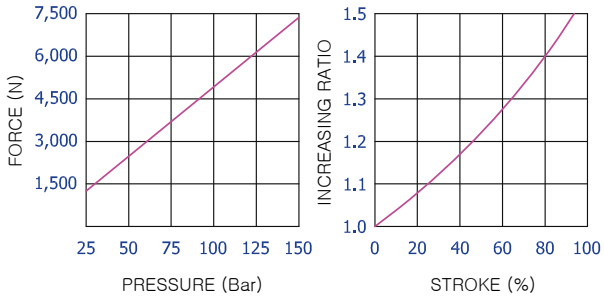


### ■ Calculation of charging pressure for TSP0750

$$\text{Charging pressure(Bar)} = \frac{\text{Initial Force(N)}}{49.1}$$

ex) What comes to the charging pressure of gas spring which demands force 6,000N?

$$122\text{(Bar)} = \frac{6{,}000\text{(N)}}{49.1}$$

22/03/2011

## XP0750(SP0500) MOUNT

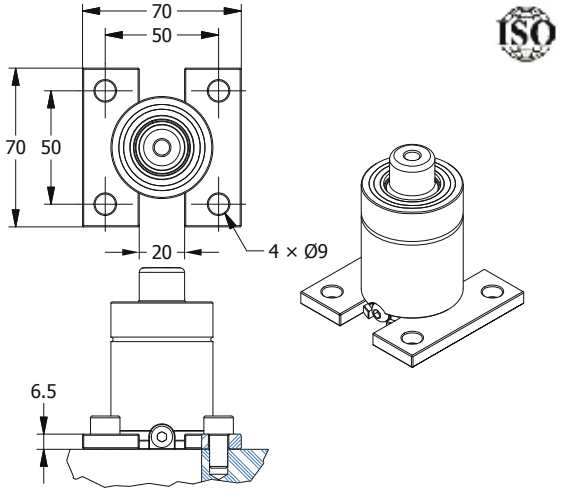


## XR0750(SR0500) MOUNT

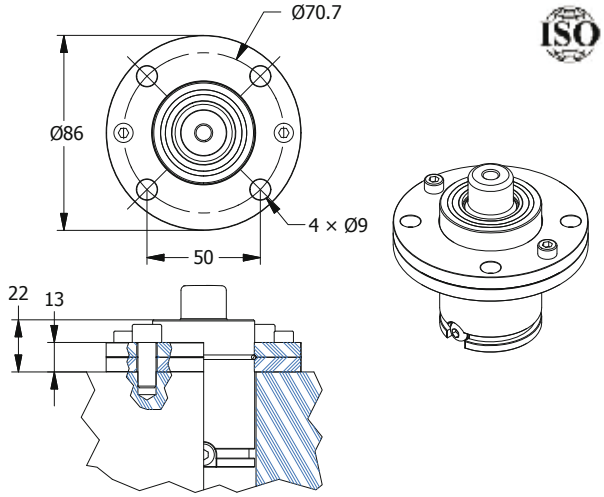


## XT0750(ST0500) MOUNT

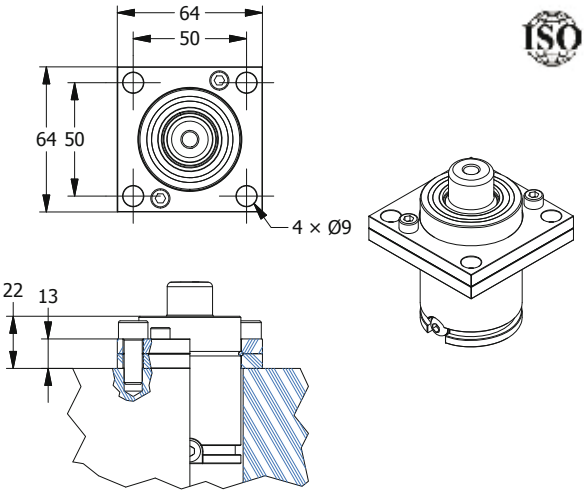


## XB0750(SB0500) MOUNT

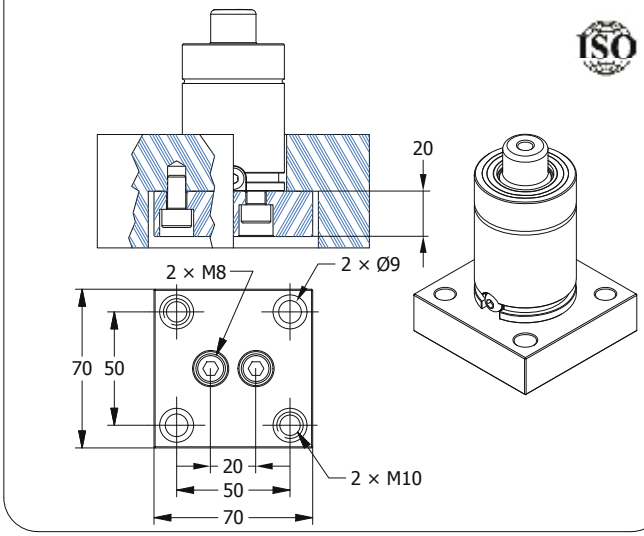


## XC0750(SC0500) MOUNT

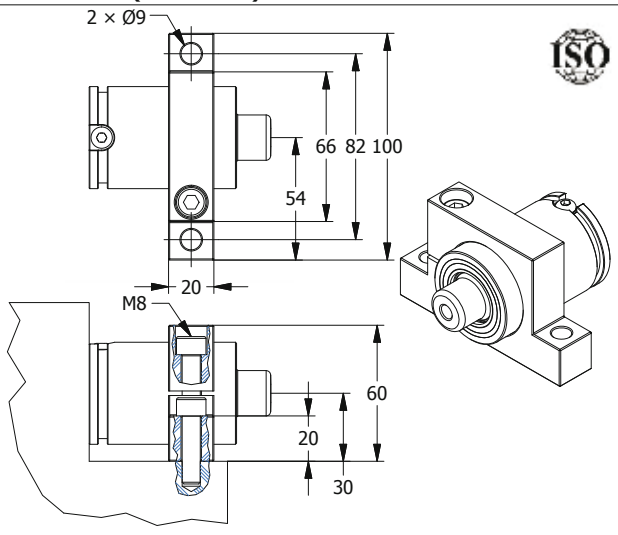


22/03/2011

PED
97/23/2C

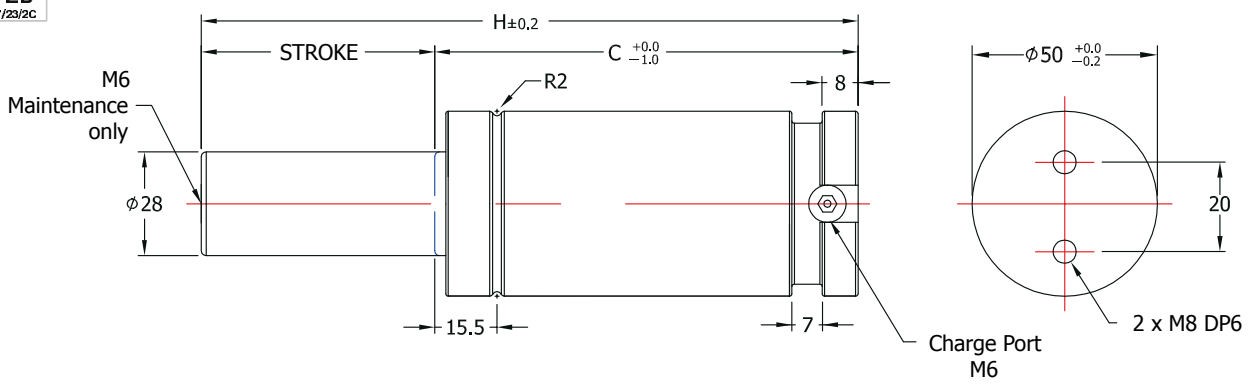


## HOW TO SPECIFY

| | | | | | | | | |
|---|---|---|---|---|---|---|---|---|
| GAS SPRING | TSP1000 (MODEL) | × | 050 (STROKE) | S(F) (SELF CONTAINED-S FITTING-SYSTEM-F) | — | (MSA) (MOUNT) | — | 150 (CHARGING PRESSURE (Bar)) |
| MOUNT | XP1000 | | | | | | | |
| REPAIR KIT | RCX1000 | | | | | | | |

[Caution!] Charging pressure has to be specified. Otherwise, 150Bar will be charged.

**TSP1000**

| Stroke (mm) | Stroke (inch) | H | C | Force(N) (150 bar / +20℃) Initial | Force(N) (150 bar / +20℃) End force* | Gas vol. (cm³) | Weight (kg) |
|---|---|---|---|---|---|---|---|
| 13 | 0.51 | 64 | 51 | 9,200 | 13,300 | 27.3 | 0.58 |
| 16 | 0.63 | 70 | 54 | | 13,600 | 32.0 | 0.61 |
| 20 | 0.79 | 78 | 58 | | 13,800 | 38.3 | 0.64 |
| 25 | 0.98 | 88 | 63 | | 14,000 | 46.2 | 0.68 |
| 30 | 1.18 | 98 | 68 | | 14,200 | 54.0 | 0.72 |
| 35 | 1.38 | 108 | 73 | | 14,300 | 61.9 | 0.76 |
| 38 | 1.50 | 114 | 76 | | 14,400 | 66.6 | 0.78 |
| 40 | 1.57 | 118 | 78 | | 14,400 | 69.7 | 0.80 |
| 45 | 1.77 | 128 | 83 | | 14,500 | 77.6 | 0.84 |
| 50 | 1.97 | 138 | 88 | | 14,600 | 85.4 | 0.89 |
| 60 | 2.36 | 158 | 98 | | 14,600 | 101.1 | 0.96 |
| 63 | 2.48 | 164 | 101 | | 14,700 | 105.8 | 0.98 |
| 70 | 2.76 | 178 | 108 | | 14,700 | 116.8 | 1.04 |
| 75 | 2.95 | 188 | 113 | | 14,700 | 124.7 | 1.09 |
| 80 | 3.15 | 198 | 118 | | 14,800 | 132.5 | 1.12 |
| 90 | 3.54 | 218 | 128 | | 14,800 | 148.2 | 1.21 |
| 100 | 3.94 | 238 | 138 | | 14,900 | 163.8 | 1.29 |
| 125 | 4.92 | 288 | 163 | | 14,900 | 203.2 | 1.49 |

* = at full stroke

### CHARGING PRESSURE/FORCE INCREASE FACTOR

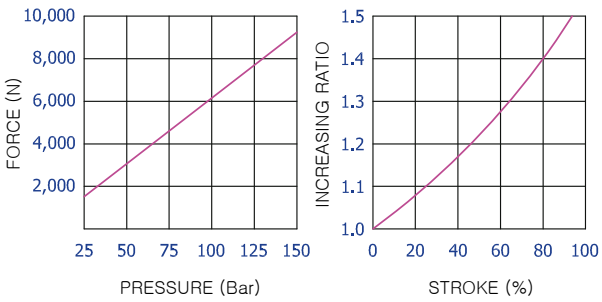


### Calculation of charging pressure for TSP1000

$$\text{Charging pressure(Bar)} = \frac{\text{Initial Force(N)}}{61.5}$$

ex) What comes to the charging pressure of gas spring which demands force 8,500N?

$$138\text{(Bar)} = \frac{8{,}500\text{(N)}}{61.5}$$

22/03/2011

## MD MOUNT WELDED

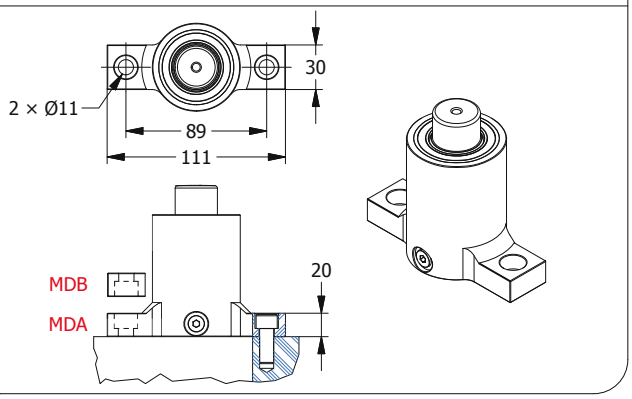


## MS MOUNT WELDED

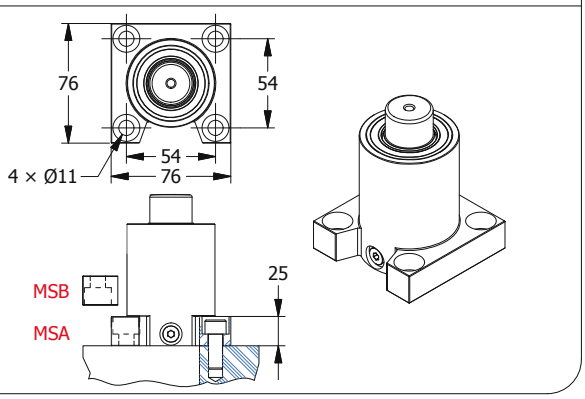


## MK MOUNT WELDED

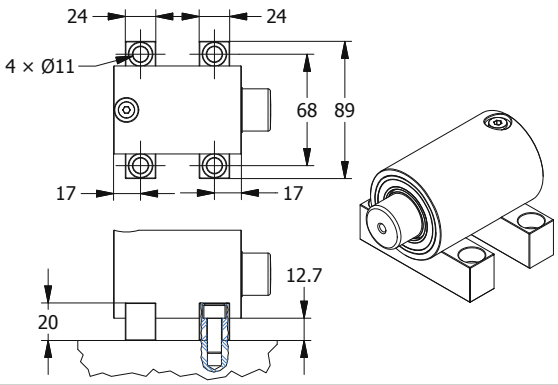


## XP1000(SP0750) MOUNT

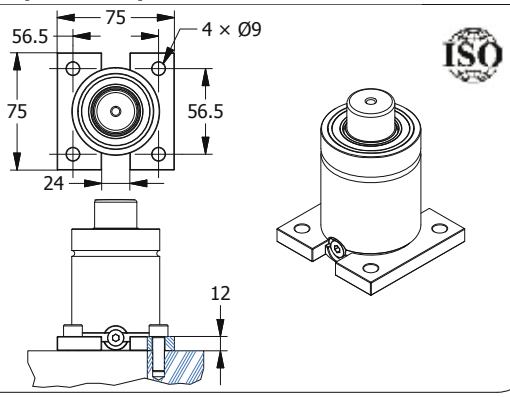


## XB1000(SB0750) MOUNT

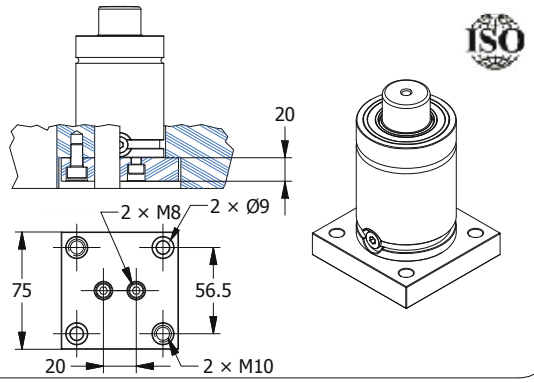


## XT1000(ST0750) MOUNT

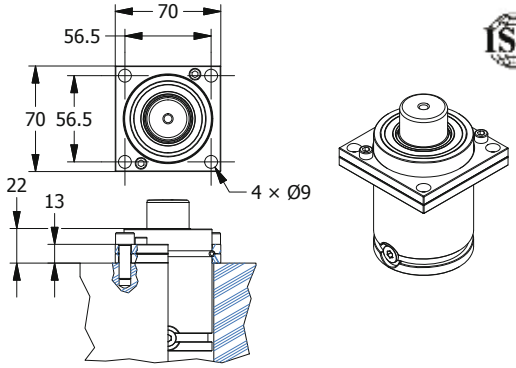


## XR1000(SR0750) MOUNT

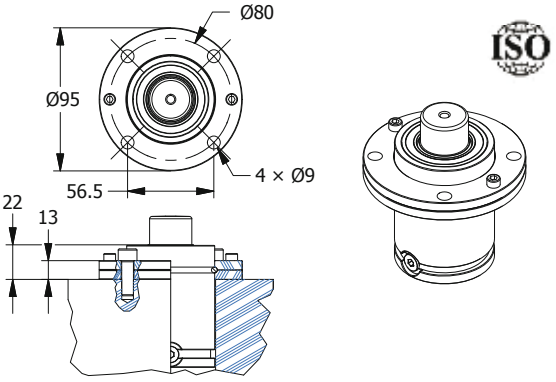


## XC1000(SC0750) MOUNT

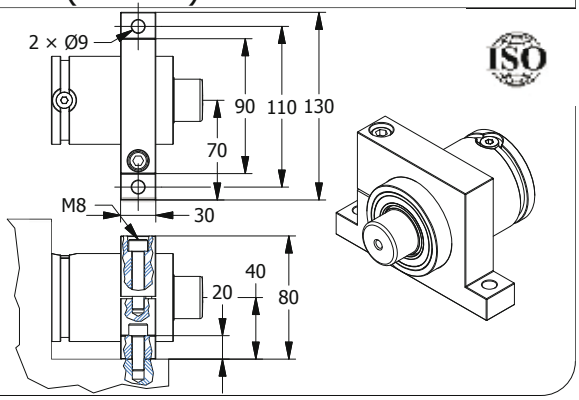


22/03/2011

PED
97/23/2C

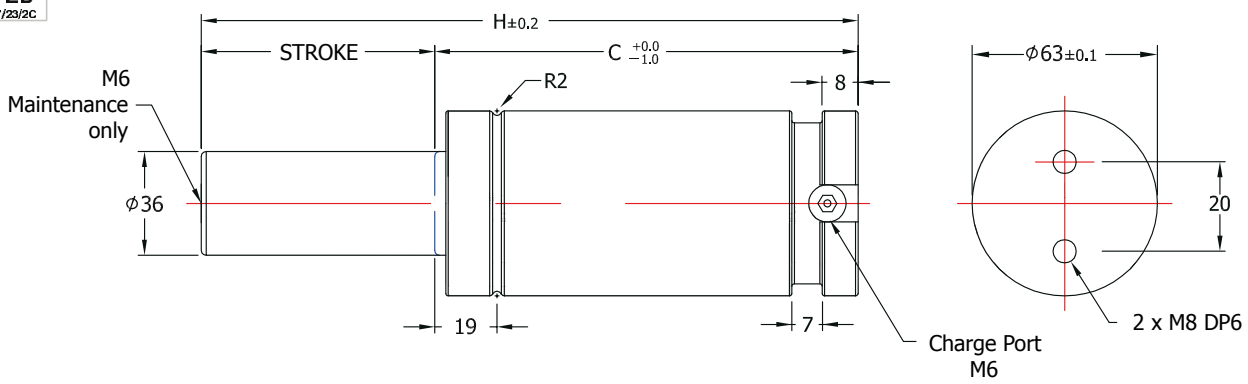


## HOW TO SPECIFY

| | | | | | | | | | |
|---|---|---|---|---|---|---|---|---|---|
| GAS SPRING | TSP1500 | × | 050 | S(F) | — | (MSA) | — | 150 | |
| | MODEL | | STROKE | SELF CONTAINED-S FITTING-SYSTEM-F | | MOUNT | | CHARGING PRESSURE (Bar) | |
| MOUNT | XP1500 | | | | | | | | |
| REPAIR KIT | RCX1500 | | | | | | | | |

[Caution!] Charging pressure has to be specified. Otherwise, 150Bar will be charged.

| TSP1500 | | | | | | | |
|---|---|---|---|---|---|---|---|
| Stroke | | H | C | Force(N) ( 150 bar / +20℃ ) | | Gas vol. (㎤) | Weight (kg) |
| (㎜) | (inch) | | | Initial | End force* | | |
| 13 | 0.51 | 70 | 57 | 15,200 | 20,900 | 48.8 | 1.04 |
| 16 | 0.63 | 76 | 60 | | 21,400 | 56.8 | 1.08 |
| 20 | 0.79 | 84 | 64 | | 21,900 | 67.4 | 1.13 |
| 25 | 0.98 | 94 | 69 | | 22,300 | 80.7 | 1.20 |
| 30 | 1.18 | 104 | 74 | | 22,600 | 93.9 | 1.27 |
| 35 | 1.38 | 114 | 79 | | 22,900 | 107.2 | 1.34 |
| 38 | 1.50 | 120 | 82 | | 23,000 | 115.2 | 1.37 |
| 40 | 1.57 | 124 | 84 | | 23,000 | 120.5 | 1.40 |
| 45 | 1.77 | 134 | 89 | | 23,200 | 133.7 | 1.47 |
| 50 | 1.97 | 144 | 94 | | 23,300 | 147.0 | 1.58 |
| 60 | 2.36 | 164 | 104 | | 23,500 | 173.5 | 1.66 |
| 63 | 2.48 | 170 | 107 | | 23,600 | 181.5 | 1.71 |
| 70 | 2.76 | 184 | 114 | | 23,700 | 200.1 | 1.80 |
| 75 | 2.95 | 194 | 119 | | 23,800 | 213.3 | 1.87 |
| 80 | 3.15 | 204 | 124 | | 23,800 | 226.3 | 1.93 |
| 90 | 3.54 | 224 | 134 | | 23,900 | 252.9 | 2.07 |
| 100 | 3.94 | 244 | 144 | | 24,000 | 279.5 | 2.19 |
| 125 | 4.92 | 294 | 169 | | 24,100 | 346.0 | 2.53 |

* = at full stroke

### CHARGING PRESSURE/FORCE INCREASE FACTOR

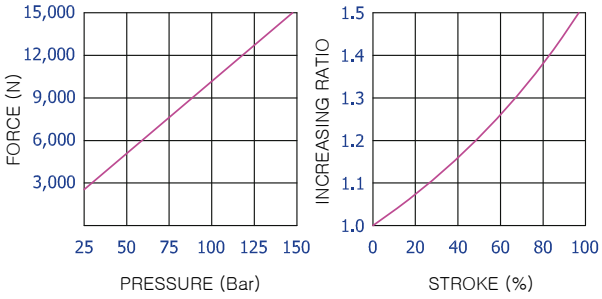


### Calculation of charging pressure for TSP1500

$$\text{Charging pressure(Bar)} = \frac{\text{Initial Force(N)}}{101.7}$$

ex) What comes to the charging pressure of gas spring which demands force 12,000N?

$$118(\text{Bar}) = \frac{12{,}000(\text{N})}{101.7}$$

22/03/2011

## MD MOUNT WELDED

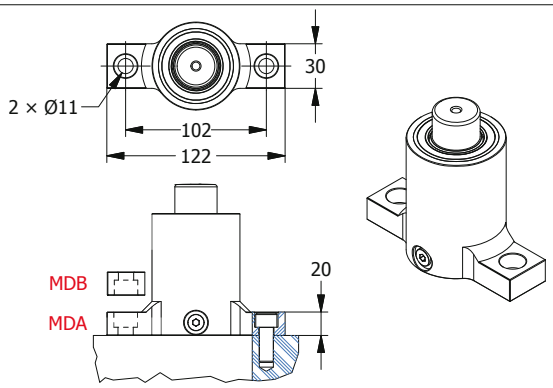


## MS MOUNT WELDED

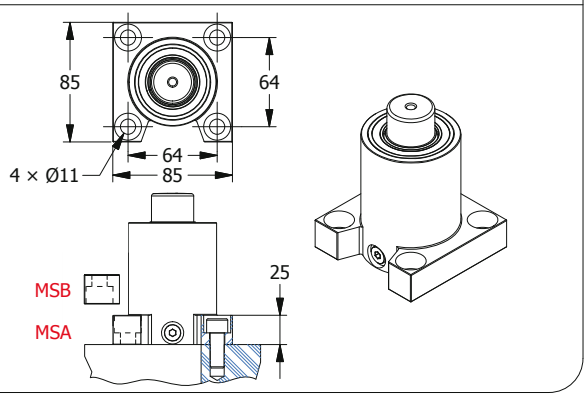


## MK MOUNT WELDED

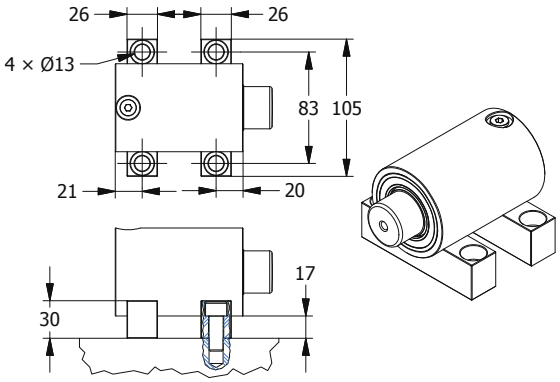


## XP1500 MOUNT

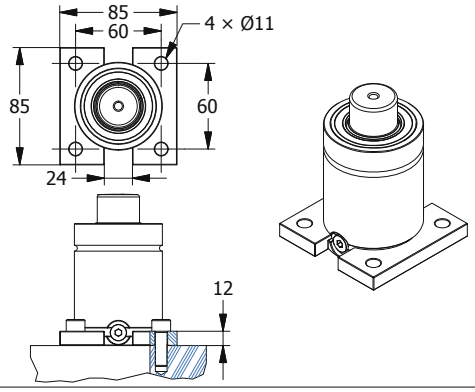


## XB1500 MOUNT

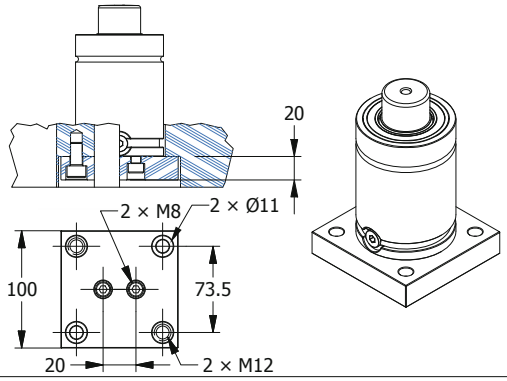


## XT1500 MOUNT

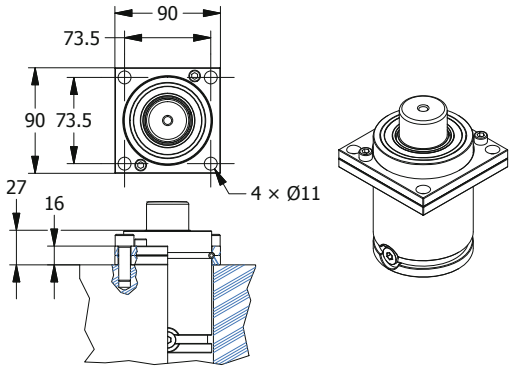


## XR1500 MOUNT

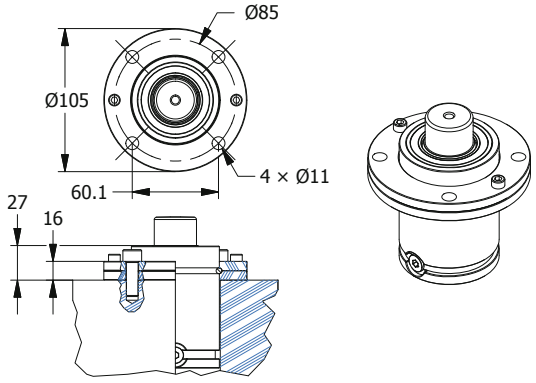


## XC1500 MOUNT

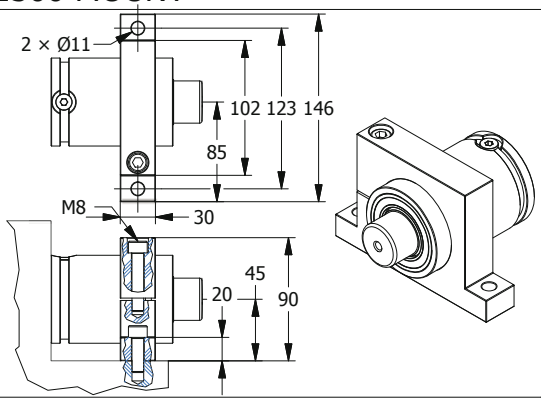


22/03/2011

PED
97/23/2C

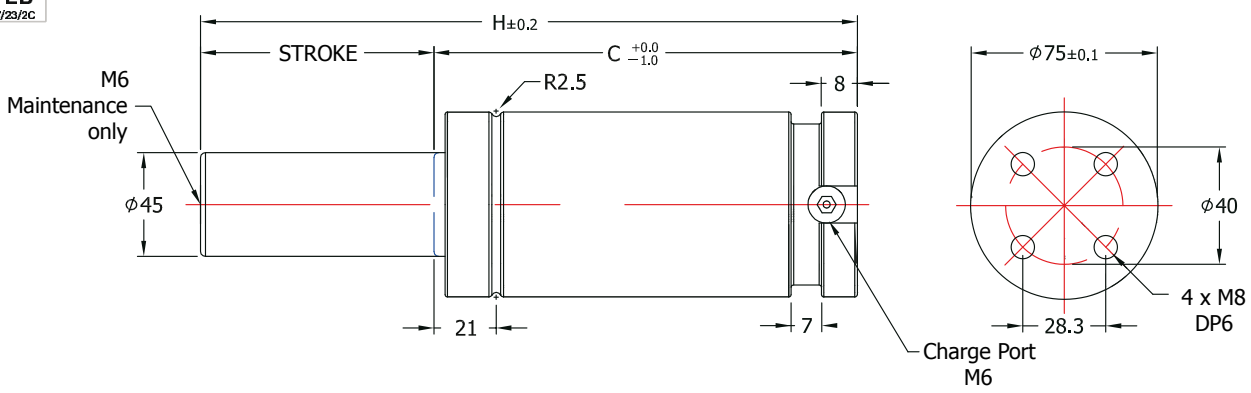


## HOW TO SPECIFY

| | | | | | | | | | |
|---|---|---|---|---|---|---|---|---|---|
| GAS SPRING | TSP2400 | × | 050 | S(F) | — | (MSA) | — | 150 |
| | MODEL | | STROKE | SELF CONTAINED-S FITTING-SYSTEM-F | | MOUNT | | CHARGING PRESSURE (Bar) |
| MOUNT | XP2400 | | | | | | | |
| REPAIR KIT | RCX2400 | | | | | | | |

[Caution!] Charging pressure has to be specified. Otherwise, 150Bar will be charged.

**TSP2400**

| Stroke (mm) | Stroke (inch) | H | C | Force(N) (150 bar / +20℃) Initial | Force(N) (150 bar / +20℃) End force* | Gas vol. (㎤) | Weight (kg) |
|---|---|---|---|---|---|---|---|
| 16 | 0.63 | 77 | 61 | | 33,800 | 86.3 | 1.58 |
| 20 | 0.79 | 85 | 65 | | 34,600 | 102.4 | 1.65 |
| 25 | 0.98 | 95 | 70 | | 35,300 | 122.5 | 1.73 |
| 30 | 1.18 | 105 | 75 | | 35,800 | 142.6 | 1.81 |
| 35 | 1.38 | 115 | 80 | | 36,200 | 162.7 | 1.89 |
| 38 | 1.50 | 121 | 83 | | 36,400 | 174.8 | 1.94 |
| 40 | 1.57 | 125 | 85 | | 36,600 | 182.8 | 1.97 |
| 45 | 1.77 | 135 | 90 | | 36,800 | 203.0 | 2.05 |
| 50 | 1.97 | 145 | 95 | 23,800 | 37,000 | 223.1 | 2.13 |
| 60 | 2.36 | 165 | 105 | | 37,400 | 263.3 | 2.30 |
| 63 | 2.48 | 171 | 108 | | 37,500 | 275.4 | 2.34 |
| 70 | 2.76 | 185 | 115 | | 37,600 | 303.5 | 2.47 |
| 75 | 2.95 | 195 | 120 | | 37,700 | 323.6 | 2.55 |
| 80 | 3.15 | 205 | 125 | | 37,800 | 343.8 | 2.63 |
| 90 | 3.54 | 225 | 135 | | 38,000 | 384.0 | 2.79 |
| 100 | 3.94 | 245 | 145 | | 38,100 | 424.2 | 2.95 |
| 125 | 4.92 | 295 | 170 | | 38,400 | 524.8 | 3.37 |

* = at full stroke

### CHARGING PRESSURE/FORCE INCREASE FACTOR

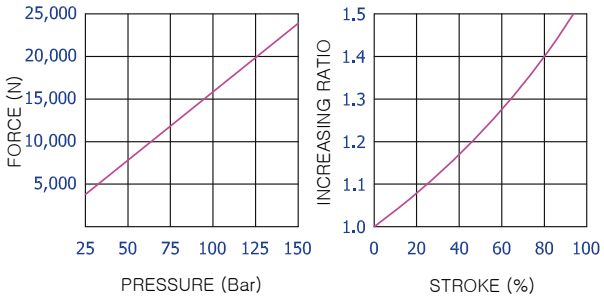


### Calculation of charging pressure for TSP2400

$$\text{Charging pressure(Bar)} = \frac{\text{Initial Force(N)}}{159.0}$$

ex) What comes to the charging pressure of gas spring which demands force 20,000N?

$$126\text{(Bar)} = \frac{20{,}000\text{(N)}}{159.0}$$

22/03/2011

## MD MOUNT WELDED

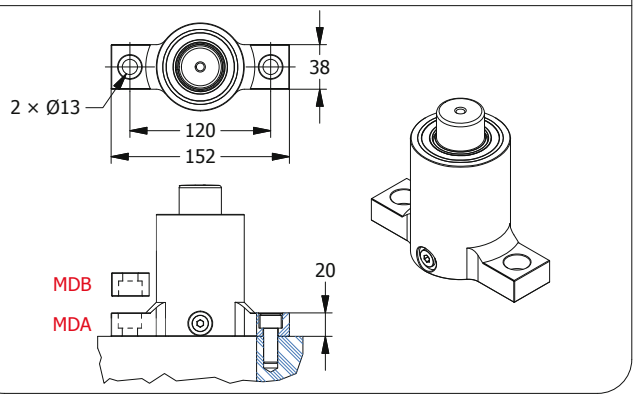


## MS MOUNT WELDED

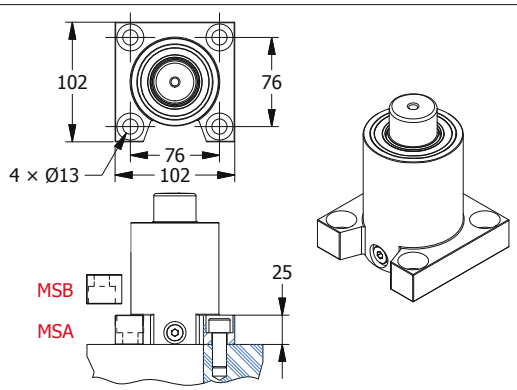


## MK MOUNT WELDED

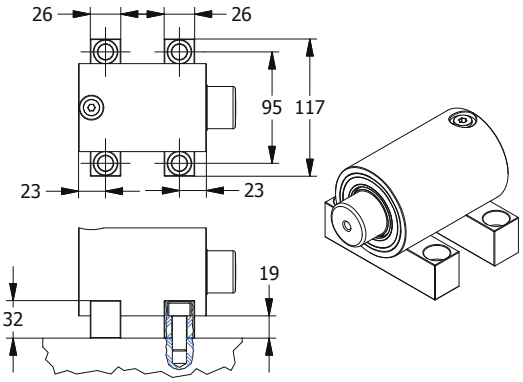


## XP2400(SP1500) MOUNT

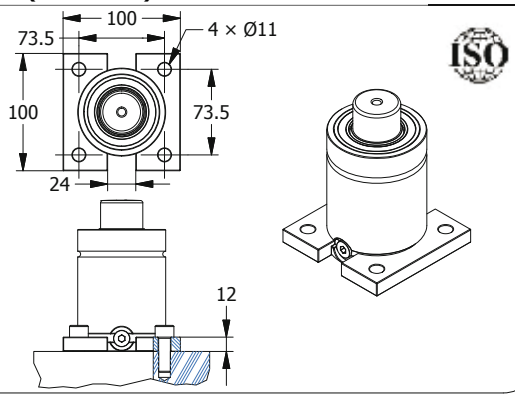


## XB2400(SB1500) MOUNT

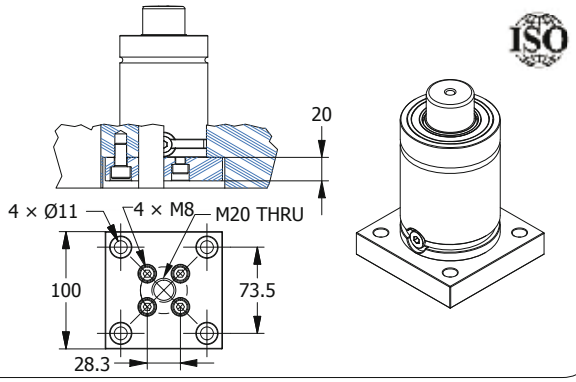


## XT2400(ST1500) MOUNT

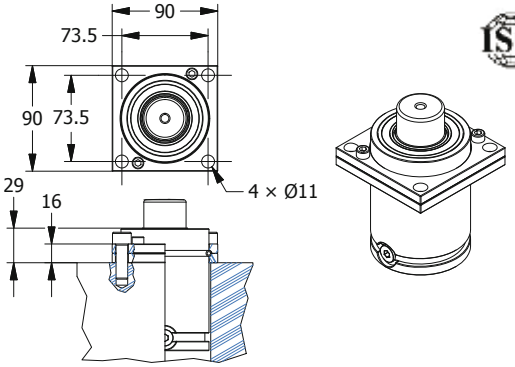


## XR2400(SR1500) MOUNT

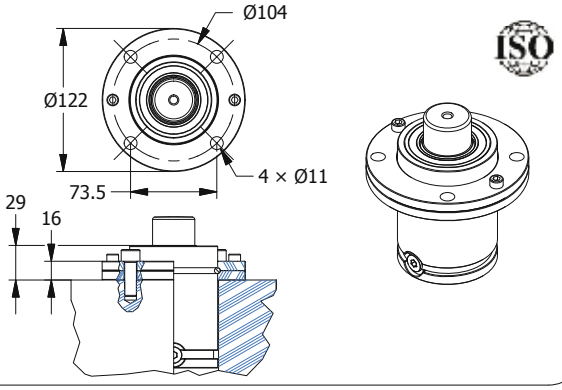


## XC2400(SC1500) MOUNT

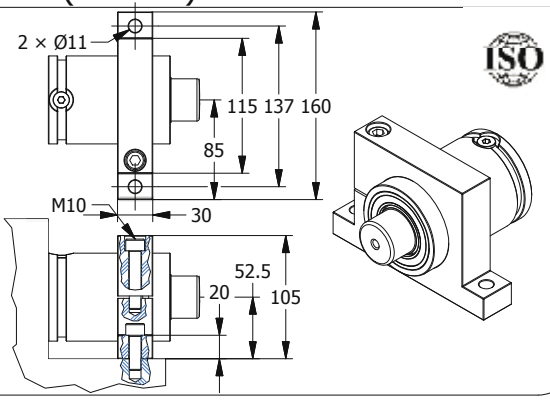


22/03/2011

PED 97/23/2C

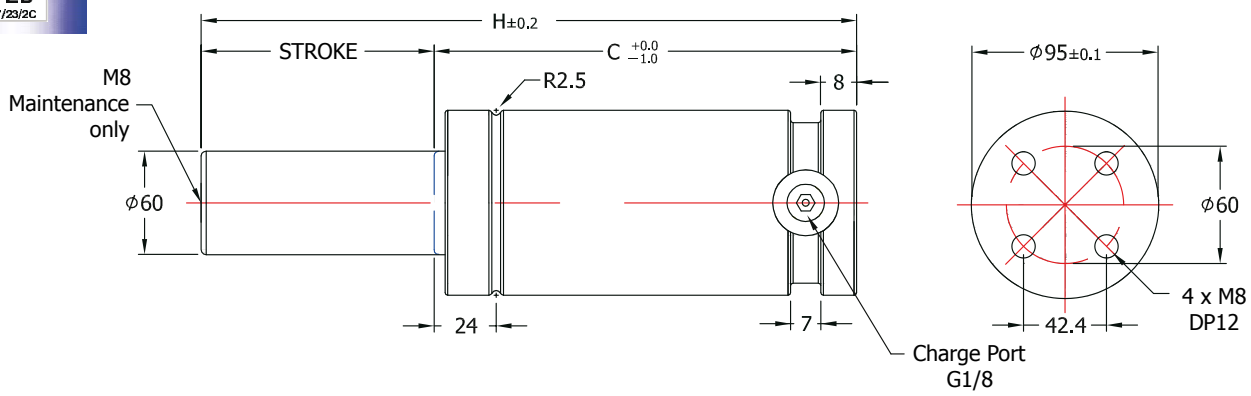


## HOW TO SPECIFY

| | | | | | | | | | |
|---|---|---|---|---|---|---|---|---|---|
| GAS SPRING | TSP4200 | × | 050 | S(F) | — | (MSA) | — | 150 | |
| | MODEL | | STROKE | SELF CONTAINED-S FITTING-SYSTEM-F | | MOUNT | | CHARGING PRESSURE (Bar) | |
| MOUNT | XP4200 | | | | | | | | |
| REPAIR KIT | RCX4200 | | | | | | | | |

[Caution!] Charging pressure has to be specified. Otherwise, 150Bar will be charged.

## TSP4200

| Stroke (㎜) | Stroke (inch) | H | C | Force(N) ( 150 bar / +20℃ ) Initial | Force(N) ( 150 bar / +20℃ ) End force* | Gas vol. (㎤) | Weight (kg) |
|---|---|---|---|---|---|---|---|
| 16 | 0.63 | 90 | 74 | | 60,600 | 150.5 | 3.21 |
| 20 | 0.79 | 98 | 78 | | 62,300 | 177.8 | 3.32 |
| 25 | 0.98 | 108 | 83 | | 63,800 | 212.0 | 3.46 |
| 30 | 1.18 | 118 | 88 | | 65,000 | 246.2 | 3.60 |
| 35 | 1.38 | 128 | 93 | | 65,900 | 280.3 | 3.75 |
| 38 | 1.50 | 134 | 96 | | 66,400 | 300.8 | 3.82 |
| 40 | 1.57 | 138 | 98 | | 66,600 | 314.5 | 3.88 |
| 45 | 1.77 | 148 | 103 | | 67,200 | 348.7 | 4.02 |
| 50 | 1.97 | 158 | 108 | 42,200 | 67,700 | 382.8 | 4.16 |
| 60 | 2.36 | 178 | 118 | | 68,500 | 451.2 | 4.44 |
| 63 | 2.48 | 184 | 121 | | 68,700 | 471.7 | 4.52 |
| 70 | 2.76 | 198 | 128 | | 69,100 | 519.5 | 4.72 |
| 75 | 2.95 | 208 | 133 | | 69,400 | 553.6 | 4.86 |
| 80 | 3.15 | 218 | 138 | | 69,600 | 587.8 | 5.00 |
| 90 | 3.54 | 238 | 148 | | 70,000 | 656.1 | 5.27 |
| 100 | 3.94 | 258 | 158 | | 70,300 | 724.5 | 5.56 |
| 125 | 4.92 | 308 | 183 | | 70,900 | 895.3 | 6.25 |

* = at full stroke

### CHARGING PRESSURE/FORCE INCREASE FACTOR

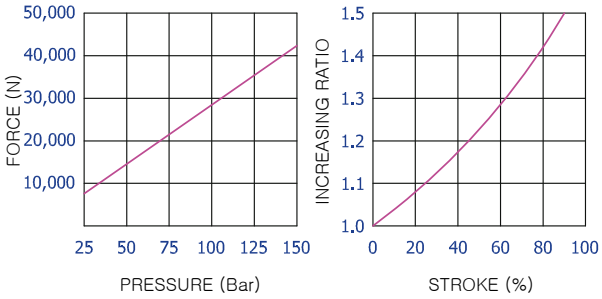


### Calculation of charging pressure for TSP4200

$$\text{Charging pressure(Bar)} = \frac{\text{Initial Force(N)}}{282.6}$$

ex) What comes to the charging pressure of gas spring which demands force 35,000N?

$$124\text{(Bar)} = \frac{35{,}000\text{(N)}}{282.6}$$

22/03/2011

## MD MOUNT WELDED

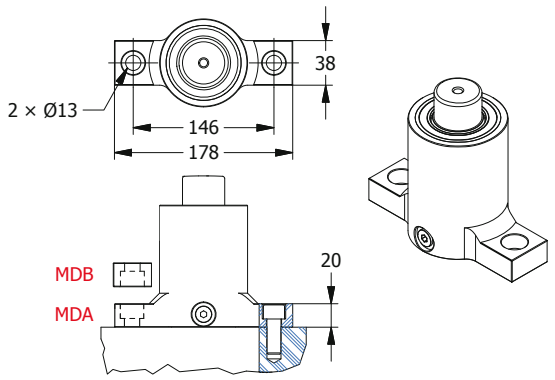


## MS MOUNT WELDED

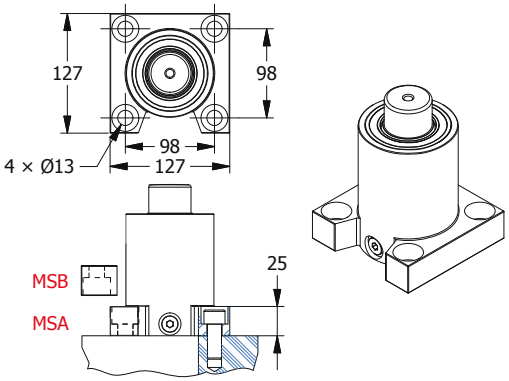


## MK MOUNT WELDED

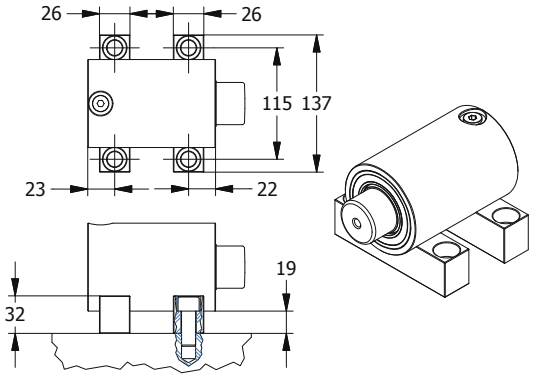


## XP4200(SP3000) MOUNT

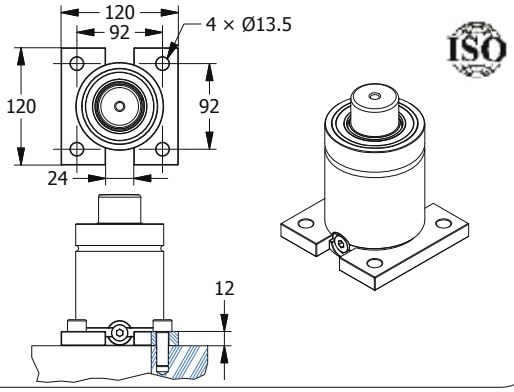


## XB4200(SB3000) MOUNT

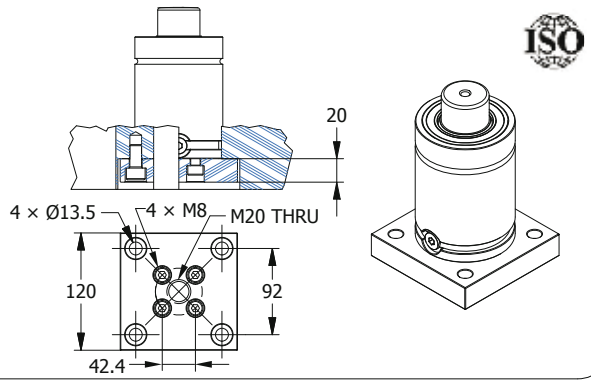


## XT4200(ST3000) MOUNT

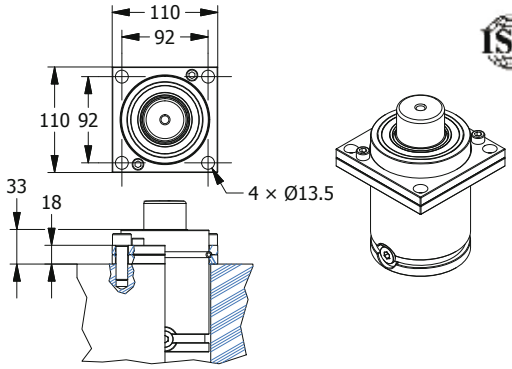


## XR4200(SR3000) MOUNT

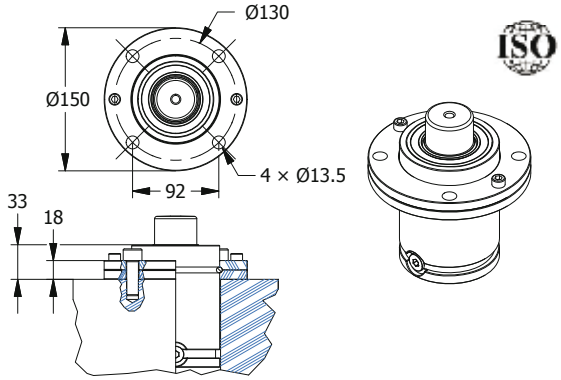


## XC4200(SC3000) MOUNT

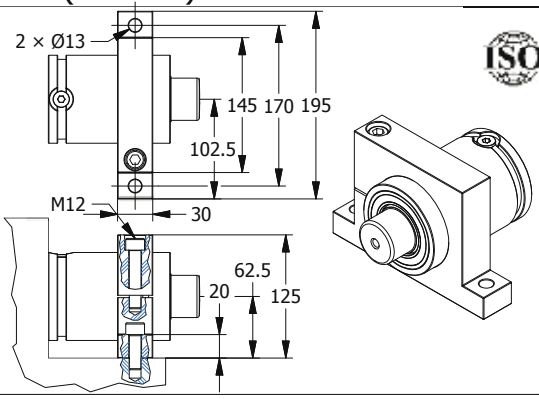


22/03/2011

PED
97/23/2C

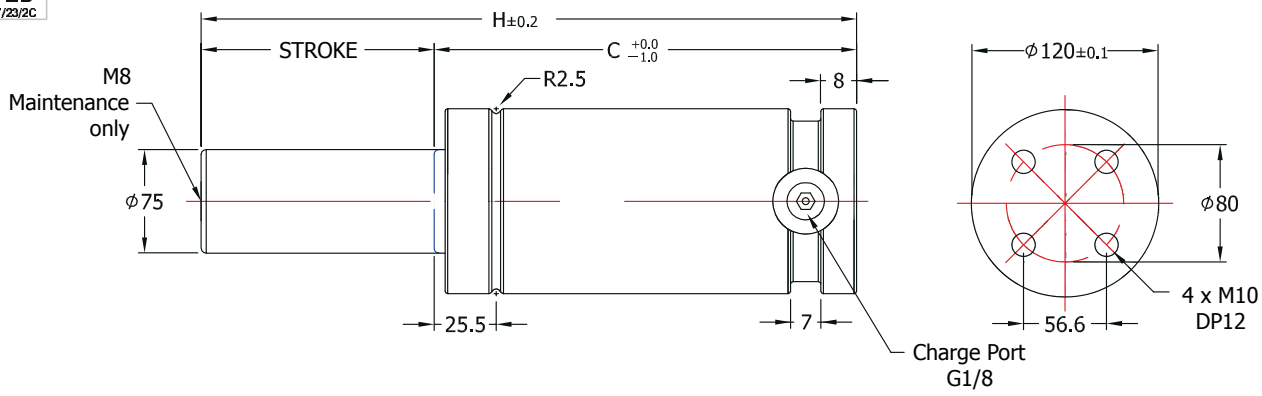


## HOW TO SPECIFY

| | | | | | | | | | |
|---|---|---|---|---|---|---|---|---|---|
| GAS SPRING | TSP6600 | × | 050 | S(F) | — | (MSA) | — | 150 |
| | MODEL | | STROKE | SELF CONTAINED-S FITTING-SYSTEM-F | | MOUNT | | CHARGING PRESSURE (Bar) |
| MOUNT | XP6600 | | | | | | | |
| REPAIR KIT | RCX6600 | | | | | | | |

[Caution!] Charging pressure has to be specified. Otherwise, 150Bar will be charged.

**TSP6600**

| Stroke | | H | C | Force(N) ( 150 bar / +20℃ ) | | Gas vol. (㎤) | Weight (kg) |
|---|---|---|---|---|---|---|---|
| (㎜) | (inch) | | | Initial | End force* | | |
| 16 | 0.63 | 100 | 84 | | 91,900 | 272.3 | 6.01 |
| 20 | 0.79 | 108 | 88 | | 93,700 | 315.7 | 6.19 |
| 25 | 0.98 | 118 | 93 | | 96,200 | 370.1 | 6.42 |
| 30 | 1.18 | 128 | 98 | | 98,200 | 424.4 | 6.65 |
| 35 | 1.38 | 138 | 103 | | 99,700 | 478.7 | 6.87 |
| 38 | 1.50 | 144 | 106 | | 100,500 | 511.3 | 7.01 |
| 40 | 1.57 | 148 | 108 | | 101,000 | 533.1 | 7.11 |
| 45 | 1.77 | 158 | 113 | | 102,100 | 587.4 | 7.33 |
| 50 | 1.97 | 168 | 118 | 66,000 | 103,000 | 641.8 | 7.56 |
| 60 | 2.36 | 188 | 128 | | 104,400 | 750.4 | 8.01 |
| 63 | 2.48 | 194 | 131 | | 104,800 | 783.0 | 8.15 |
| 70 | 2.76 | 208 | 138 | | 105,500 | 859.1 | 8.47 |
| 75 | 2.95 | 218 | 143 | | 105,900 | 913.4 | 8.70 |
| 80 | 3.15 | 228 | 148 | | 106,400 | 967.8 | 8.93 |
| 90 | 3.54 | 248 | 158 | | 107,100 | 1076.5 | 9.38 |
| 100 | 3.94 | 268 | 168 | | 107,600 | 1185.1 | 9.84 |
| 125 | 4.92 | 318 | 193 | | 108,700 | 1456.8 | 10.98 |

* = at full stroke

### CHARGING PRESSURE/FORCE INCREASE FACTOR

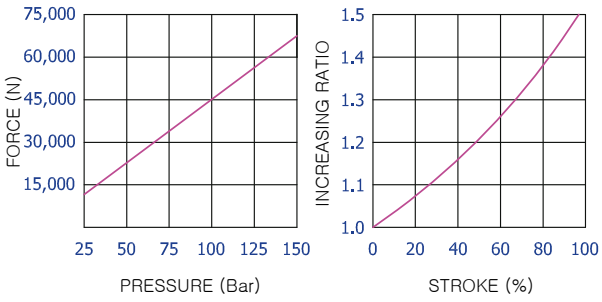


### Calculation of charging pressure for TSP6600

$$\text{Charging pressure(Bar)} = \frac{\text{Initial Force(N)}}{441.6}$$

ex) What comes to the charging pressure of gas spring which demands force 60,000N?

$$136(\text{Bar}) = \frac{60{,}000(\text{N})}{441.6}$$

22/03/2011

## MD MOUNT WELDED

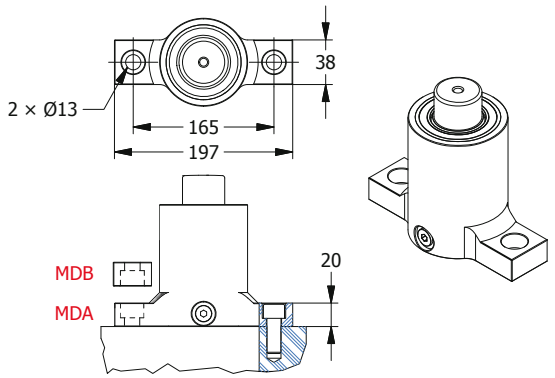


## MS MOUNT WELDED

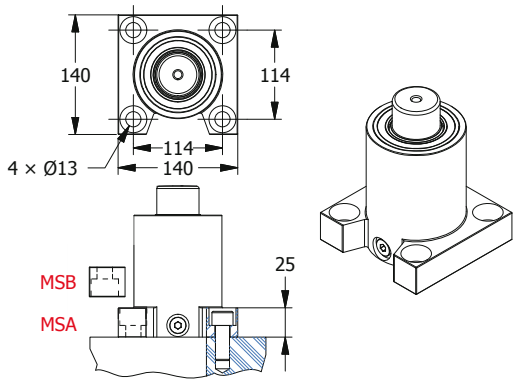


## MK MOUNT WELDED

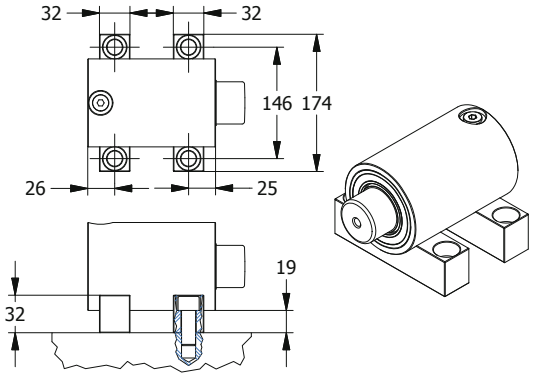


## XP6600(SP5000) MOUNT

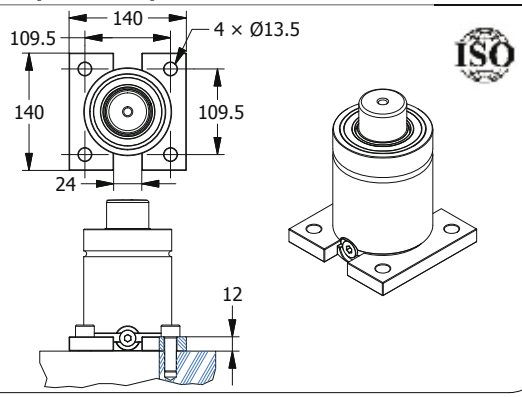


## XB6600(SB5000) MOUNT

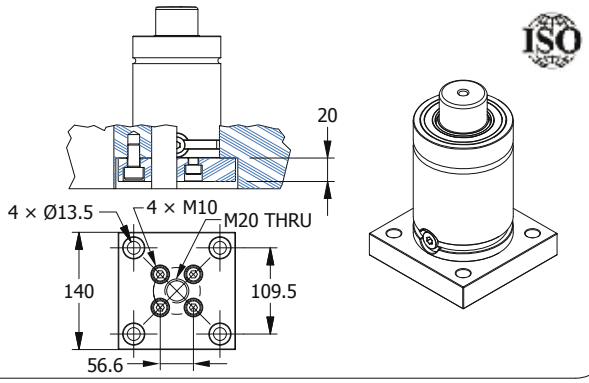


## XT6600(ST5000) MOUNT

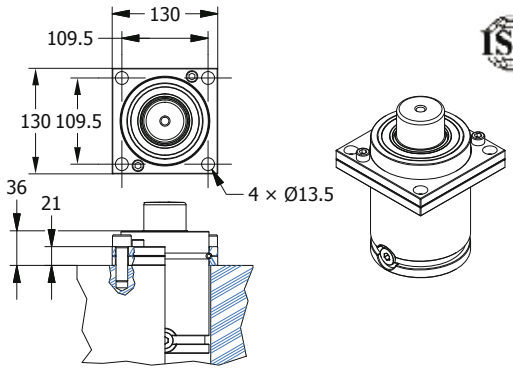


## XR6600(SR5000) MOUNT

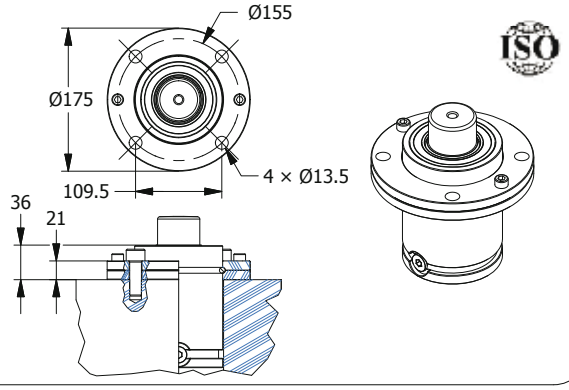


## XC6600(SC5000) MOUNT

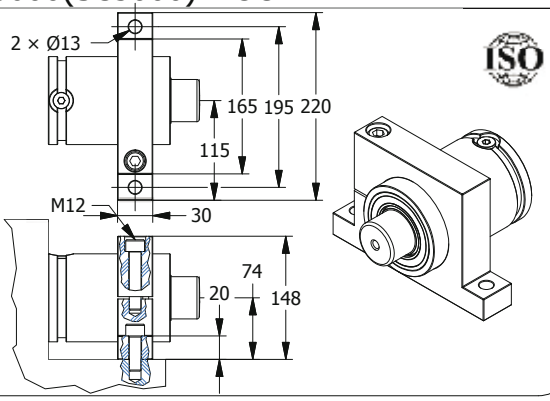


22/03/2011

PED
97/23/2C

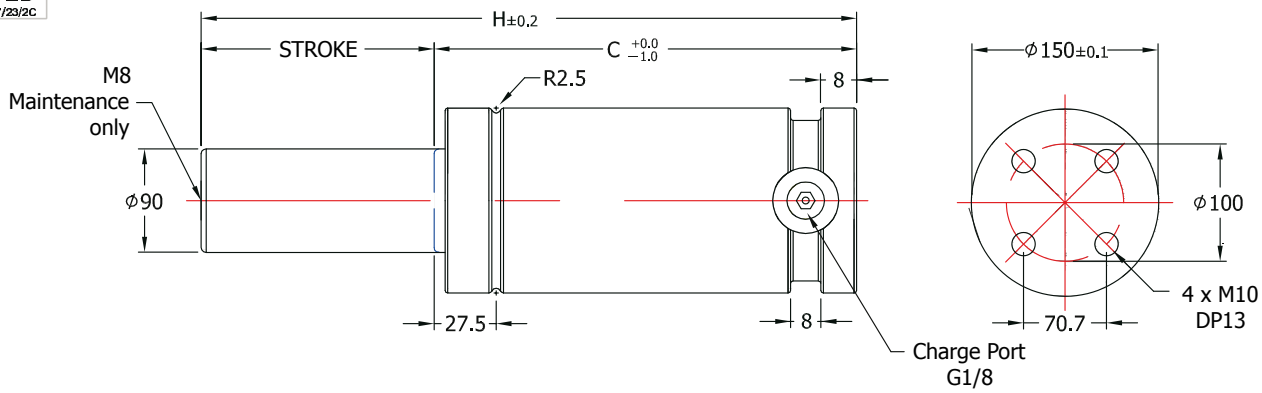


## HOW TO SPECIFY

GAS SPRING — TSP9500 (MODEL) × 050 (STROKE) S(F) (SELF CONTAINED-S FITTING-SYSTEM-F) — (MSA) (MOUNT) — 150 (CHARGING PRESSURE (Bar))

MOUNT — XP9500

REPAIR KIT — RCX9500

[Caution!] Charging pressure has to be specified. Otherwise, 150Bar will be charged.

**TSP9500**

| Stroke (mm) | Stroke (inch) | H | C | Force(N) (150 bar / +20℃) Initial | Force(N) (150 bar / +20℃) End force* | Gas vol. (㎤) | Weight (kg) |
|---|---|---|---|---|---|---|---|
| 20 | 0.79 | 118 | 98 | 95,000 | 127,600 | 509.9 | 10.78 |
| 25 | 0.98 | 128 | 103 | | 131,000 | 591.6 | 11.10 |
| 30 | 1.18 | 138 | 108 | | 133,700 | 673.3 | 11.60 |
| 35 | 1.38 | 148 | 113 | | 135,900 | 755.0 | 12.84 |
| 38 | 1.50 | 154 | 116 | | 137,000 | 804.0 | 13.18 |
| 40 | 1.57 | 158 | 118 | | 137,700 | 836.6 | 13.24 |
| 45 | 1.77 | 168 | 123 | | 139,200 | 918.3 | 14.48 |
| 50 | 1.97 | 178 | 128 | | 140,500 | 1000.0 | 14.70 |
| 60 | 2.36 | 198 | 138 | | 142,600 | 1163.3 | 15.50 |
| 63 | 2.48 | 204 | 141 | | 143,100 | 1212.3 | 15.64 |
| 70 | 2.76 | 218 | 148 | | 144,200 | 1326.7 | 16.20 |
| 75 | 2.95 | 228 | 153 | | 144,900 | 1408.4 | 17.30 |
| 80 | 3.15 | 238 | 158 | | 145,500 | 1490.0 | 18.10 |
| 90 | 3.54 | 258 | 168 | | 146,500 | 1653.4 | 19.60 |
| 100 | 3.94 | 278 | 178 | | 147,400 | 1816.7 | 20.44 |
| 125 | 4.92 | 328 | 203 | | 149,100 | 2225.1 | 21.20 |

* = at full stroke

### CHARGING PRESSURE/FORCE INCREASE FACTOR

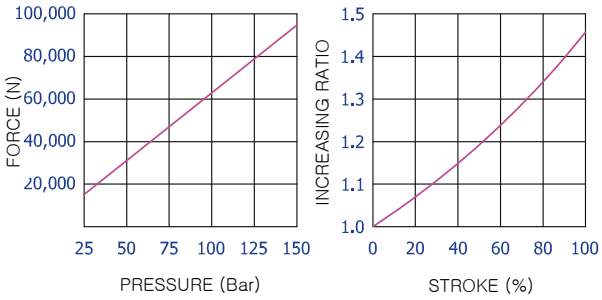


### Calculation of charging pressure for TSP9500

$$\text{Charging pressure(Bar)} = \frac{\text{Initial Force(N)}}{635.9}$$

ex) What comes to the charging pressure of gas spring which demands force 85,000N?

$$134\text{(Bar)} = \frac{85{,}000\text{(N)}}{635.9}$$

22/03/2011

## MS MOUNT WELDED

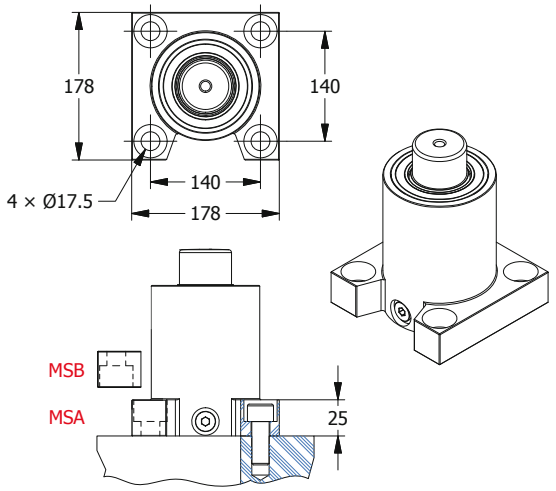


## XB9500(SB7500) MOUNT

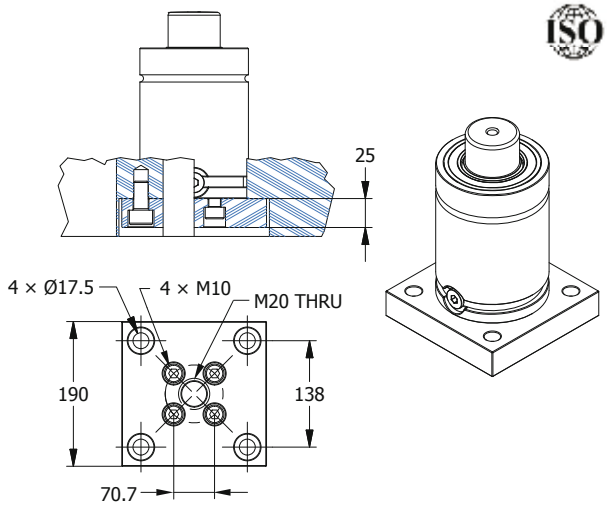


## XR9500(SR7500) MOUNT

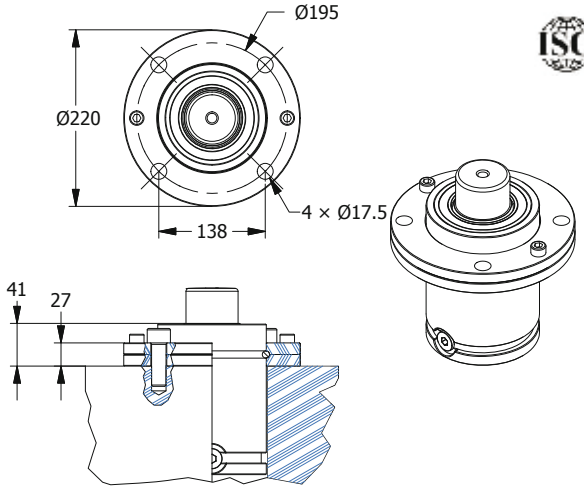


## XT9500(ST7500) MOUNT

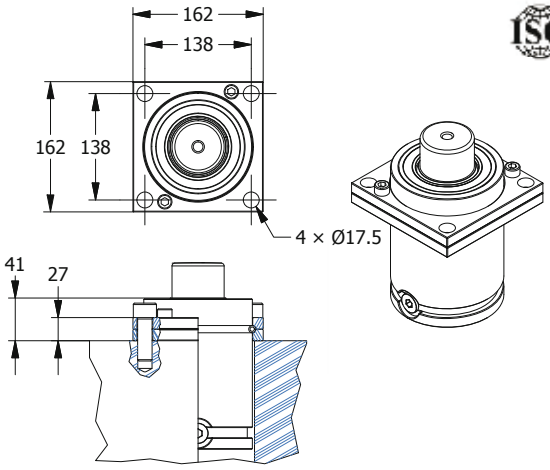


## XP9500(SP7500) MOUNT

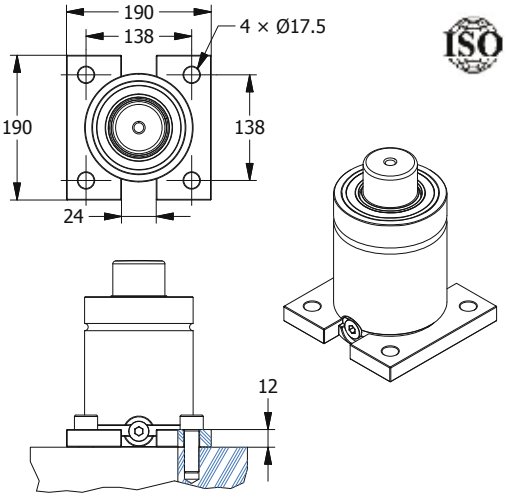


## XC9500(SC7500) MOUNT

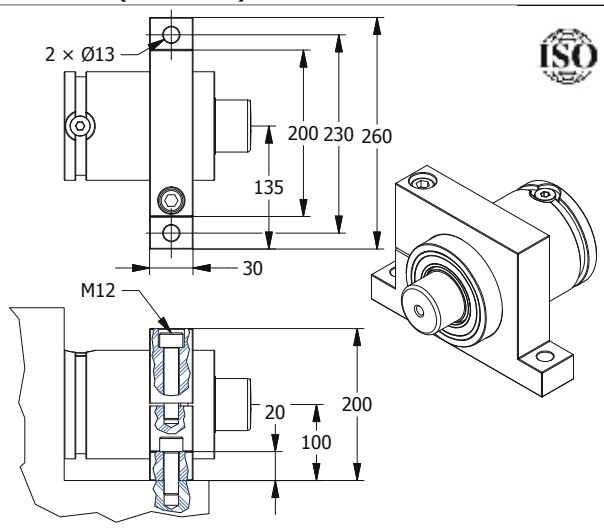


22/03/2011

# EOC Normalien

## TSM Series

PED 97/23/EC

CE

ISO 9001

JAS-ANZ

www.eoc.de

22/03/2011

CONTENTS

# TSM-SERIES

TSM0150 . . . . . .
TSM0300 . . . . . .
TSM0500 . . . . . .
TSM0750 . . . . . .
TSM1500 . . . . . .
TSM3000 . . . . . .
TSM5000 . . . . . .

## COMPACT TYPE

### MODEL

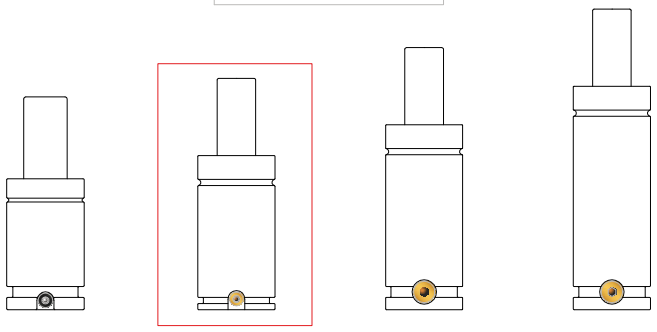


■ General Specification

- Filling Materials: Nitrogen GAs(N2)
- Maximum Stroke Rate Per Minute (Recommended): ~50 to 100 (at 20℃)
- Maximum Filling Pressure: 150~175 bar (at 20℃)
- Piston Rod Speed: 0.03~0.8 m/s
- Minimum Filling Pressure: 25 bar (at 20℃)
- Rod Surface Treatment: Nitrate Coating
- Operation Temperature: -5 to 80℃
- Cylinder Surface Treatment: Oxidized Black Coating
- Pressure Increase as per Temperature: ±0.3% / ℃

■ Specification

| TYPE | Stroke (mm) | Cylinder Diameter Φ(mm) | Rod Φ(mm) | Initial Force (N) | End Force (N) | MAX. Charging Pressure |
|---|---|---|---|---|---|---|
| TSM0150 | 10~125 | 25 | 12 | P34 Reference | P34 Reference | P34 Reference |
| TSM0300 | 10~125 | 38 | 16 | 3,000 | 4,200 | 150Bar |
| TTM0300 | | M38 | | | | |
| TSM0500 | 10~125 | 45 | 20 | 4,650 | 6,500 | 150Bar |
| TSM0750 | 10~125 | 50 | 25 | 7,350 | 12,000 | 150Bar |
| TSM1500 | 10~200 | 75 | 36 | 15,150 | 22,100 | 150Bar |
| TSM3000 | 10~200 | 95 | 50 | 29,400 | 47,600 | 150Bar |
| TSM5000 | 10~200 | 120 | 65 | 49,650 | 84,100 | 150Bar |

※ The above specification is subject to change without notice for performance improvement.

22/03/2011

PED 97/23/2C

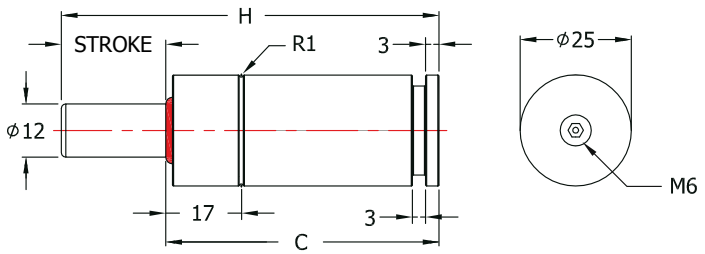


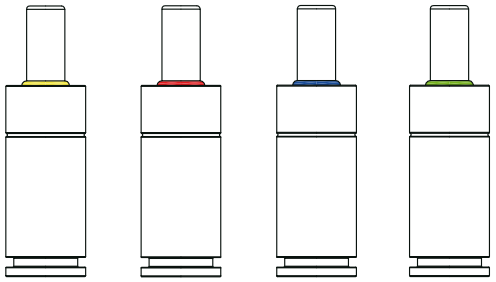


## HOW TO SPECIFY

GAS SPRING — TSM0150 (MODEL) × 050 (STROKE) – 175(YELLOW) (CHARGING PRESSURE (Bar))

MOUNT — SP0150

REPAIR KIT — Non-repairable

| TSM0150 | | | | | | | | | |
|---|---|---|---|---|---|---|---|---|---|
| Stroke | | H | C | Force(N) (175·135·90·45 bar / +20℃) | | | | Gas vol. (㎤) | weight (kg) |
| (㎜) | (inch) | | | End force* | End force* | End force* | End force* | | |
| 10 | 0.39 | 62 | 52 | 2,600 | 2,000 | 1,300 | 700 | 4.7 | 0.14 |
| 13 | 0.51 | 68 | 55 | 2,700 | 2,000 | 1,300 | 700 | 5.7 | 0.15 |
| 15 | 0.59 | 72 | 57 | 2,700 | 2,000 | 1,300 | 700 | 6.4 | 0.16 |
| 16 | 0.63 | 74 | 58 | 2,700 | 2,000 | 1,400 | 700 | 6.8 | 0.16 |
| 20 | 0.79 | 82 | 62 | 2,700 | 2,100 | 1,400 | 700 | 8.1 | 0.17 |
| 25 | 0.98 | 92 | 67 | 2,800 | 2,100 | 1,400 | 700 | 9.9 | 0.18 |
| 30 | 1.18 | 102 | 72 | 2,800 | 2,100 | 1,400 | 700 | 11.6 | 0.19 |
| 35 | 1.38 | 112 | 77 | 2,800 | 2,100 | 1,400 | 700 | 13.3 | 0.20 |
| 38 | 1.50 | 118 | 80 | 2,800 | 2,100 | 1,400 | 700 | 14.4 | 0.21 |
| 40 | 1.57 | 122 | 82 | 2,800 | 2,100 | 1,400 | 700 | 15.1 | 0.22 |
| 45 | 1.77 | 132 | 87 | 2,800 | 2,100 | 1,400 | 700 | 16.8 | 0.23 |
| 50 | 1.97 | 142 | 92 | 2,800 | 2,100 | 1,400 | 700 | 18.5 | 0.24 |
| 60 | 2.36 | 165 | 105 | 2,900 | 2,100 | 1,400 | 700 | 22.0 | 0.27 |
| 63 | 2.48 | 172 | 109 | 2,800 | 2,100 | 1,400 | 700 | 23.4 | 0.27 |
| 70 | 2.76 | 185 | 115 | 2,900 | 2,200 | 1,400 | 700 | 25.4 | 0.29 |
| 80 | 3.15 | 205 | 125 | 2,900 | 2,200 | 1,400 | 700 | 28.9 | 0.32 |
| 100 | 3.94 | 245 | 145 | 2,900 | 2,200 | 1,400 | 700 | 35.8 | 0.36 |
| 125 | 4.92 | 295 | 170 | 2,900 | 2,200 | 1,400 | 700 | 44.5 | 0.40 |

* = at full stroke

※ Special type is available upon requested.

*Note:*
All of EOC Normalien gas spring must be secured with a stroke reserved at least 10% of the length of the stroke. Not allowed disassembled in any case without manufacture's instructions.

■ FORCE CHART

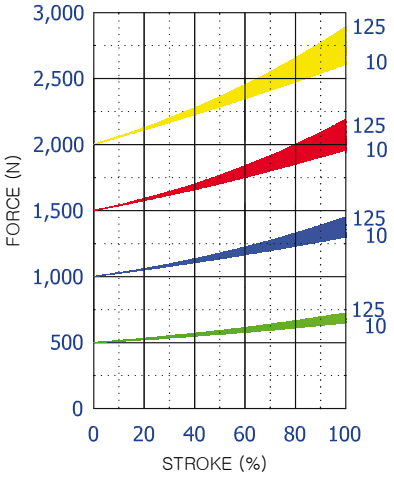


TSM0150 is pre-charged when shipped and comes in four types, depending on the force. The pressure cannot be adjusted but Nitrogen is rechargeable.

| Color | Force (N) | bar |
|---|---|---|
| YELLOW | 2,000 | 175 |
| RED | 1,500 | 135 |
| BLUE | 1,000 | 90 |
| GREEN | 500 | 45 |

22/03/2011

## SP0150 MOUNT

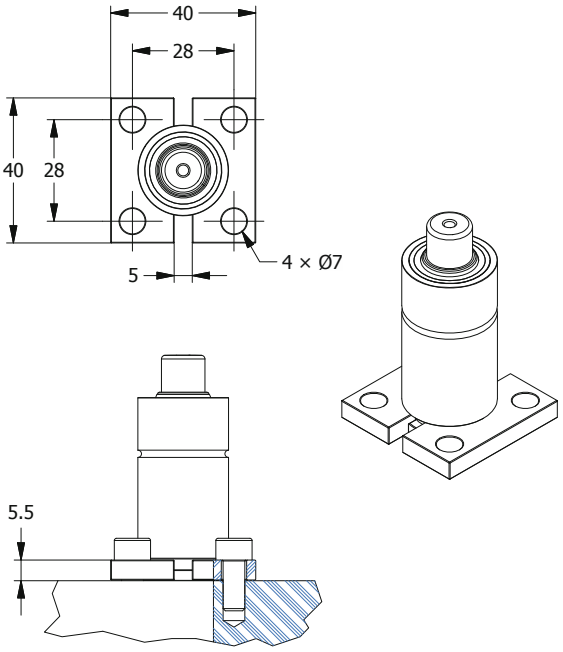


## SR0150 MOUNT

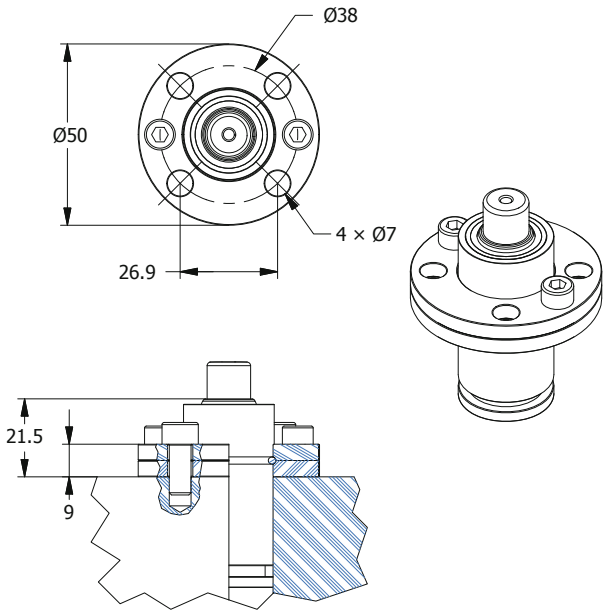


## SB0150 MOUNT

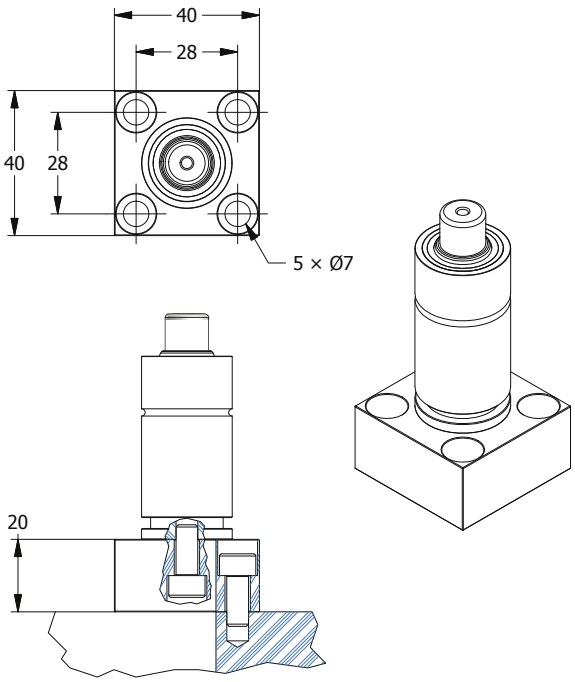


## SG0150 MOUNT

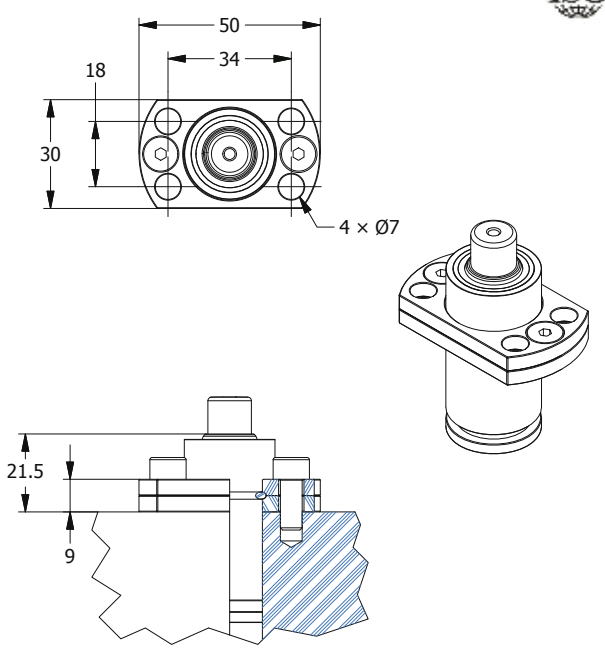

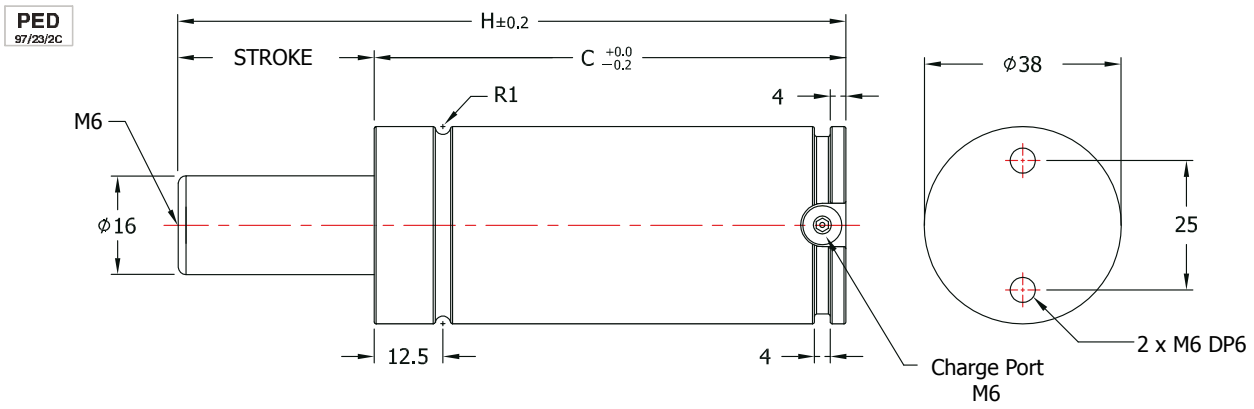


## HOW TO SPECIFY

| | | | | | | | |
|---|---|---|---|---|---|---|---|
| GAS SPRING | TSP0300 (MODEL) | × | 050 (STROKE) | S(F) (SELF CONTAINED-S FITTING-SYSTEM-F) | — | 150 (CHARGING PRESSURE (Bar)) |
| MOUNT | SP0300 | | | | | |
| REPAIR KIT | RCM0300 | | | | | |

[Caution!] Charging pressure has to be specified. Otherwise, 150Bar will be charged.

**TSM0300**

| Stroke (mm) | Stroke (inch) | H | C | Force(N) (150 bar / +20℃) Initial | Force(N) (150 bar / +20℃) End force* | Gas vol. (㎤) | weight (kg) |
|---|---|---|---|---|---|---|---|
| 10 | 0.39 | 70 | 60 | | 3,900 | 8.5 | 0.44 |
| 15 | 0.59 | 80 | 65 | | 4,000 | 12.0 | 0.46 |
| 20 | 0.79 | 90 | 70 | | 4,000 | 15.5 | 0.50 |
| 25 | 0.98 | 100 | 75 | | 4,100 | 19.1 | 0.52 |
| 30 | 1.18 | 110 | 80 | | 4,100 | 22.6 | 0.56 |
| 35 | 1.38 | 120 | 85 | | 4,100 | 26.1 | 0.58 |
| 38 | 1.50 | 126 | 88 | | 4,100 | 28.3 | 0.58 |
| 40 | 1.57 | 130 | 90 | | 4,100 | 29.7 | 0.60 |
| 45 | 1.77 | 140 | 95 | | 4,100 | 33.2 | 0.62 |
| 50 | 1.97 | 150 | 100 | 3,000 | 4,100 | 36.7 | 0.66 |
| 60 | 2.36 | 170 | 110 | | 4,100 | 43.8 | 0.70 |
| 63 | 2.48 | 176 | 113 | | 4,100 | 45.9 | 0.72 |
| 70 | 2.76 | 190 | 120 | | 4,100 | 50.9 | 0.76 |
| 80 | 3.15 | 210 | 130 | | 4,100 | 57.9 | 0.80 |
| 90 | 3.54 | 230 | 140 | | 4,100 | 65.0 | 0.84 |
| 100 | 3.94 | 250 | 150 | | 4,200 | 72.1 | 0.90 |
| 110 | 4.33 | 270 | 160 | | 4,200 | 79.1 | 0.96 |
| 120 | 4.72 | 290 | 170 | | 4,200 | 86.2 | 1.00 |
| 125 | 4.92 | 300 | 175 | | 4,200 | 89.7 | 1.04 |

* = at full stroke

※ Special type is available upon requested.

### ■ CHARGING PRESSURE/FORCE INCREASE FACTOR

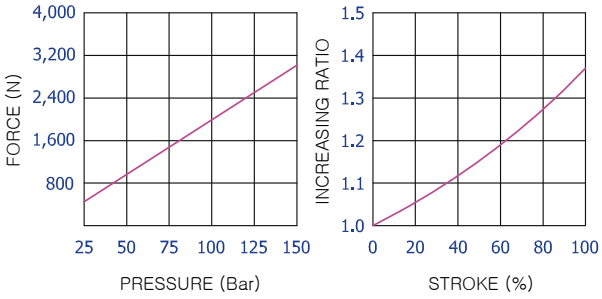


### ■ Calculation of charging pressure for TSM0300

$$\text{Charging pressure(Bar)} = \frac{\text{Initial Force(N)}}{20.1}$$

ex) What comes to the charging pressure of gas spring which demands force 2,500N?

$$124\text{(Bar)} = \frac{2{,}500\text{(N)}}{20.1}$$

22/03/2011

## SP0300 MOUNT

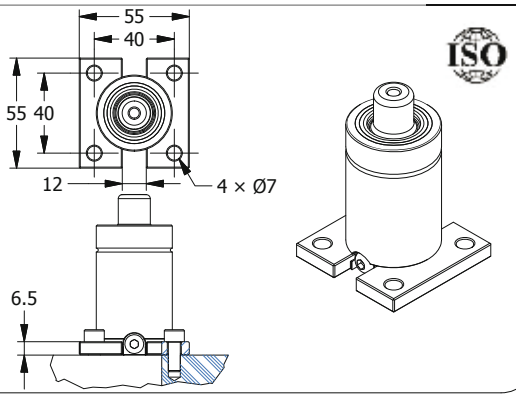


## SR0300 MOUNT

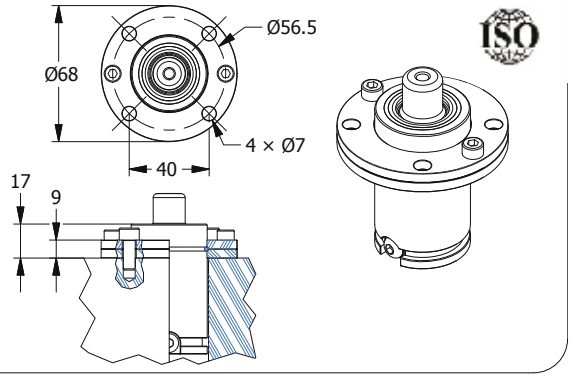


## ST0300 MOUNT

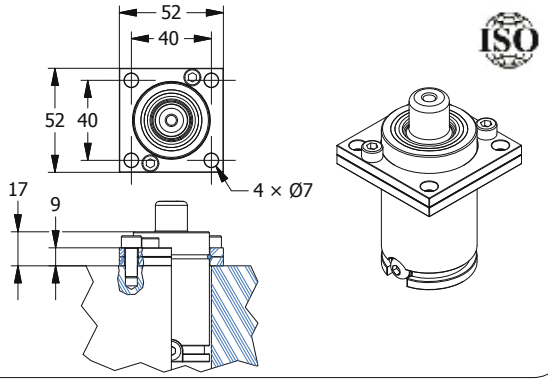


## SC0300 MOUNT

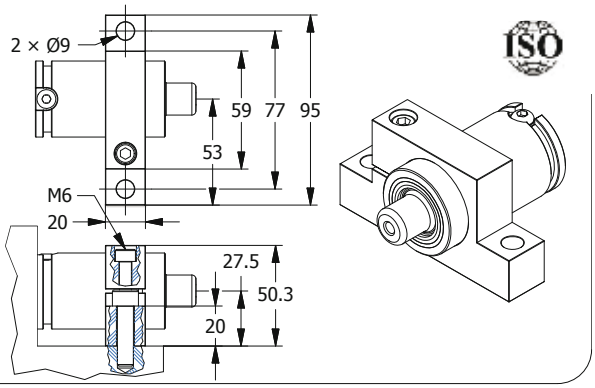


## TTM0300 (Threaded Option)

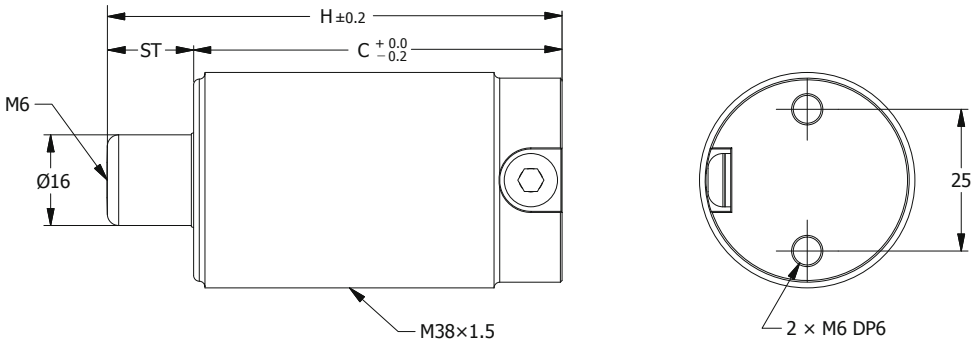


## SN0300 MOUNT For TTM0300

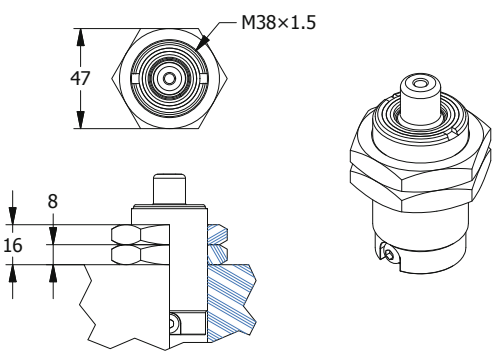


## SG0300 MOUNT For TTM0300

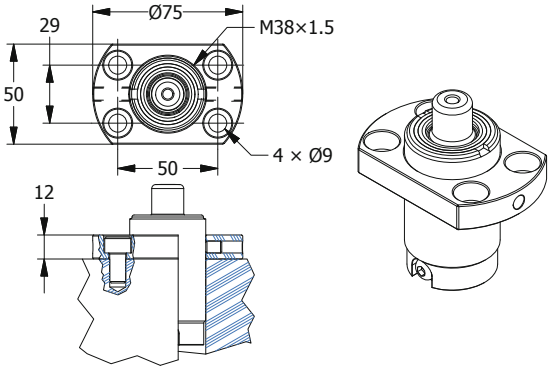


22/03/2011

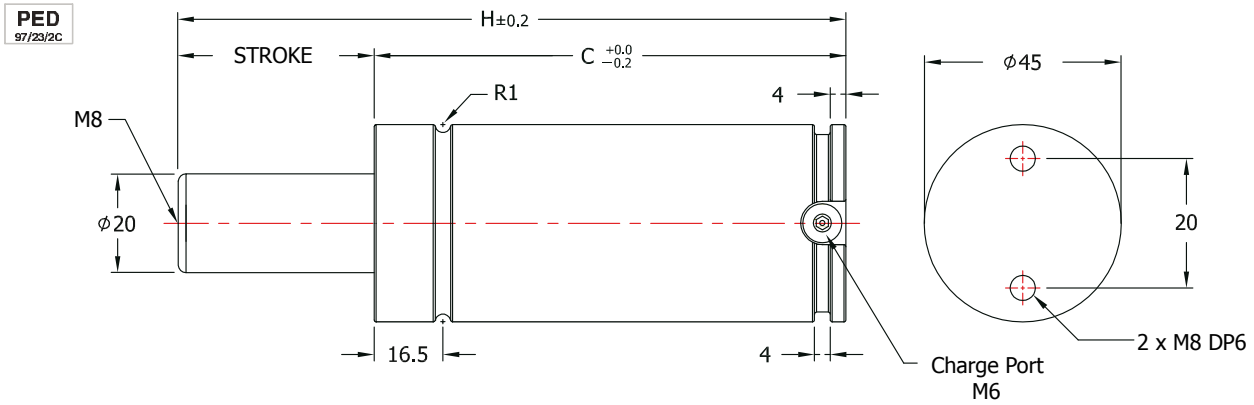


## HOW TO SPECIFY

| | | | | | | | |
|---|---|---|---|---|---|---|---|
| GAS SPRING | TSM0500 (MODEL) | × | 050 (STROKE) | S(F) (SELF CONTAINED-S FITTING-SYSTEM-F) | — | 150 (CHARGING PRESSURE (Bar)) |
| MOUNT | SP0500 | | | | | |
| REPAIR KIT | RCM0500 | | | | | |

[Caution!] Charging pressure has to be specified. Otherwise, 150Bar will be charged.

**TSM0500**

| Stroke (㎜) | Stroke (inch) | H | C | Force(N) (150 bar / +20℃) Initial | Force(N) (150 bar / +20℃) End force* | Gas vol. (㎤) | weight (kg) |
|---|---|---|---|---|---|---|---|
| 10 | 0.39 | 70 | 60 | | 6,100 | 12.9 | 0.60 |
| 15 | 0.59 | 80 | 65 | | 6,200 | 18.3 | 0.64 |
| 20 | 0.79 | 90 | 70 | | 6,300 | 23.6 | 0.68 |
| 25 | 0.98 | 100 | 75 | | 6,300 | 29.0 | 0.72 |
| 30 | 1.18 | 110 | 80 | | 6,400 | 34.4 | 0.76 |
| 35 | 1.38 | 120 | 85 | | 6,400 | 39.8 | 0.80 |
| 38 | 1.50 | 126 | 88 | | 6,400 | 43.0 | 0.81 |
| 40 | 1.57 | 130 | 90 | | 6,400 | 45.1 | 0.82 |
| 45 | 1.77 | 140 | 95 | | 6,400 | 50.5 | 0.86 |
| 50 | 1.97 | 150 | 100 | 4,650 | 6,400 | 55.9 | 0.89 |
| 60 | 2.36 | 170 | 110 | | 6,500 | 66.6 | 0.96 |
| 63 | 2.48 | 176 | 113 | | 6,500 | 69.9 | 0.98 |
| 70 | 2.76 | 190 | 120 | | 6,500 | 77.4 | 1.01 |
| 80 | 3.15 | 210 | 130 | | 6,500 | 88.1 | 1.09 |
| 90 | 3.54 | 230 | 140 | | 6,500 | 98.9 | 1.16 |
| 100 | 3.94 | 250 | 150 | | 6,500 | 109.6 | 1.23 |
| 110 | 4.33 | 270 | 160 | | 6,500 | 120.4 | 1.30 |
| 120 | 4.72 | 290 | 170 | | 6,500 | 131.1 | 1.35 |
| 125 | 4.92 | 300 | 175 | | 6,500 | 136.5 | 1.39 |

* = at full stroke

※ Special type is available upon requested.

### ■ CHARGING PRESSURE/FORCE INCREASE FACTOR

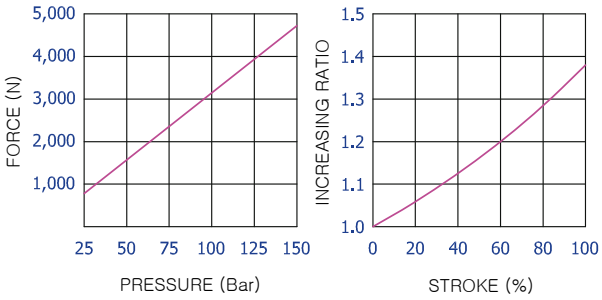


### ■ Calculation of charging pressure for TSM0500

$$\text{Charging pressure(Bar)} = \frac{\text{Initial Force(N)}}{31.4}$$

ex) What comes to the charging pressure of gas spring which demands force 4,000N?

$$127\text{(Bar)} = \frac{4{,}000\text{(N)}}{31.4}$$

22/03/2011

## SP0500 MOUNT

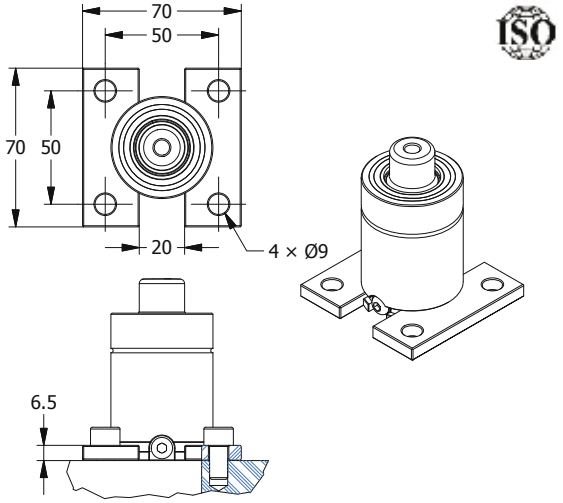


## SR0500 MOUNT

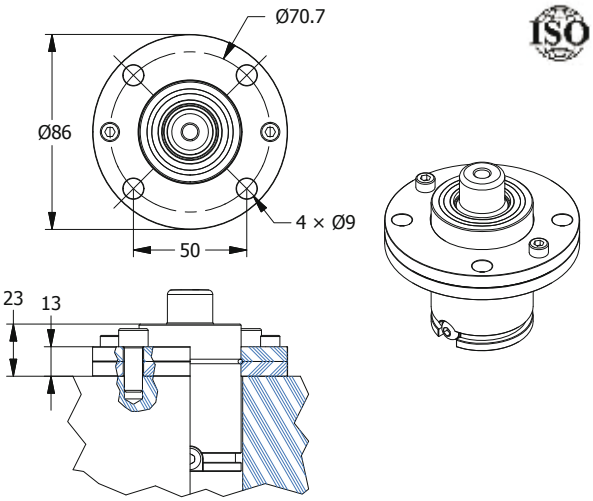


## ST0500 MOUNT

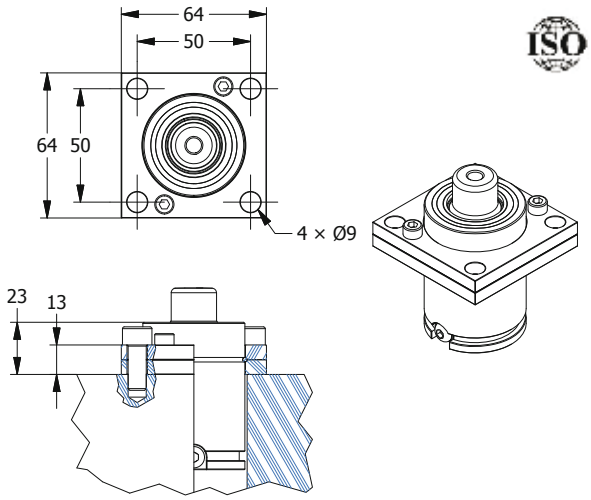


## SB0500 MOUNT

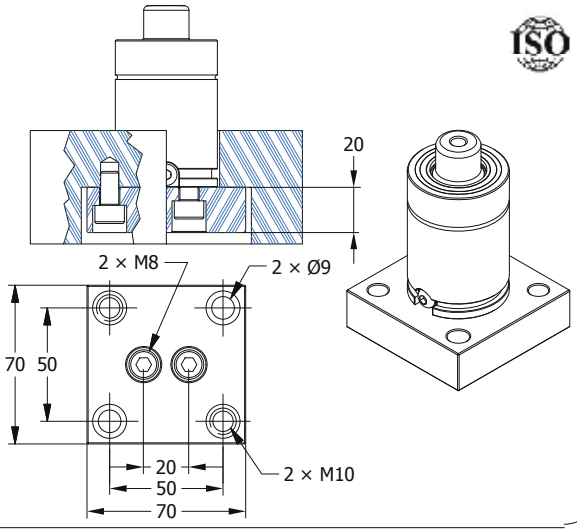


## SC0500 MOUNT

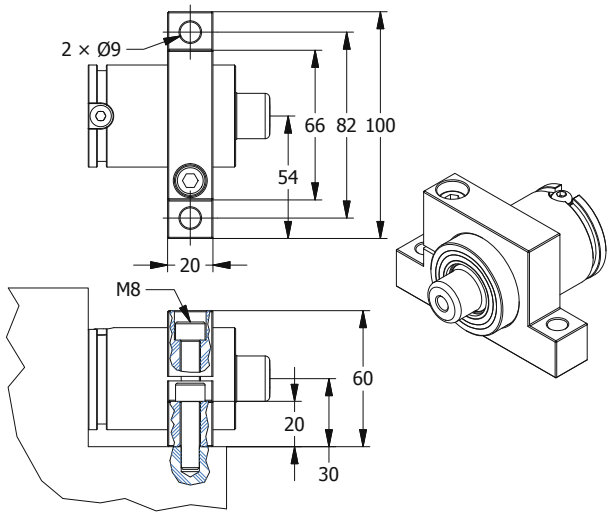


22/03/2011

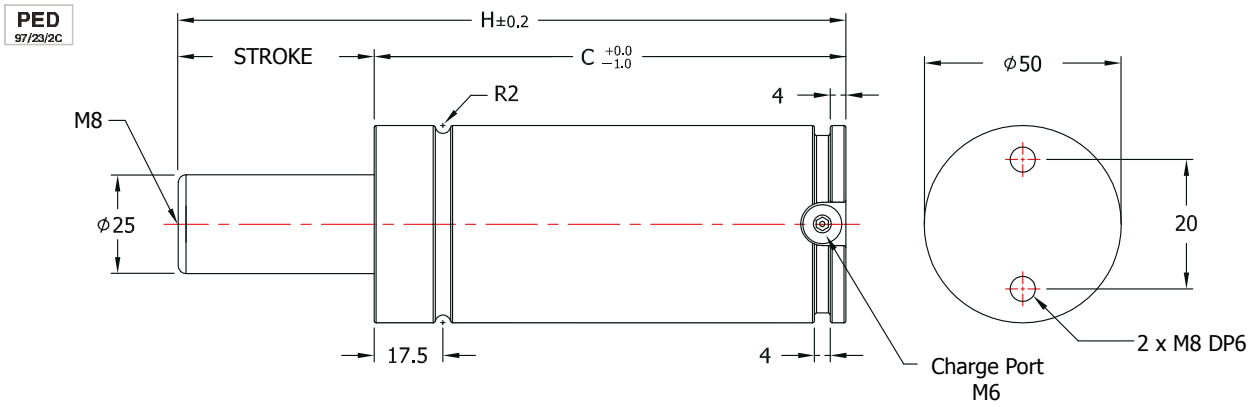


## HOW TO SPECIFY

| | | | | | | | | |
|---|---|---|---|---|---|---|---|---|
| GAS SPRING | TSM0750 | × | 050 | S(F) | — | (MSA) | — | 150 |
| | MODEL | | STROKE | SELF CONTAINED-S FITTING-SYSTEM-F | | MOUNT | | CHARGING PRESSURE (Bar) |
| MOUNT | SP0750 | | | | | | | |
| REPAIR KIT | RCM0750 | | | | | | | |

[Caution!] Charging pressure has to be specified. Otherwise, 150Bar will be charged.

**TSM0750**

| Stroke | | H | C | Force(N) ( 150 bar / +20℃ ) | | Gas vol. (㎤) | weight (kg) |
|---|---|---|---|---|---|---|---|
| (㎜) | (inch) | | | Initial | End force* | | |
| 10 | 0.39 | 70 | 60 | 7,350 | 11,700 | 13.2 | 0.75 |
| 12.7 | 0.50 | 75.4 | 62.7 | | 11,800 | 16.6 | 0.78 |
| 15 | 0.59 | 80 | 65 | | 11,800 | 19.5 | 0.80 |
| 20 | 0.79 | 90 | 70 | | 11,900 | 25.7 | 0.86 |
| 25 | 0.98 | 100 | 75 | | 11,900 | 32.0 | 0.92 |
| 30 | 1.18 | 110 | 80 | | 11,900 | 38.3 | 0.94 |
| 35 | 1.38 | 120 | 85 | | 11,900 | 44.6 | 1.02 |
| 38 | 1.50 | 126 | 88 | | 12,000 | 48.4 | 1.04 |
| 40 | 1.57 | 130 | 90 | | 12,000 | 50.9 | 1.06 |
| 45 | 1.77 | 140 | 95 | | 12,000 | 57.1 | 1.10 |
| 50 | 1.97 | 150 | 100 | | 12,000 | 63.4 | 1.14 |
| 60 | 2.36 | 170 | 110 | | 12,000 | 76.0 | 1.24 |
| 63 | 2.48 | 176 | 113 | | 12,000 | 79.8 | 1.26 |
| 70 | 2.76 | 190 | 120 | | 12,000 | 88.5 | 1.34 |
| 75 | 2.95 | 200 | 125 | | 12,000 | 94.8 | 1.38 |
| 80 | 3.15 | 210 | 130 | | 12,000 | 101.1 | 1.43 |
| 90 | 3.54 | 230 | 140 | | 12,000 | 113.7 | 1.53 |
| 100 | 3.94 | 250 | 150 | | 12,000 | 126.2 | 1.62 |
| 125 | 4.92 | 300 | 175 | | 12,000 | 157.6 | 1.84 |

* = at full stroke

※ Special type is available upon requested.

### ■ CHARGING PRESSURE/FORCE INCREASE FACTOR

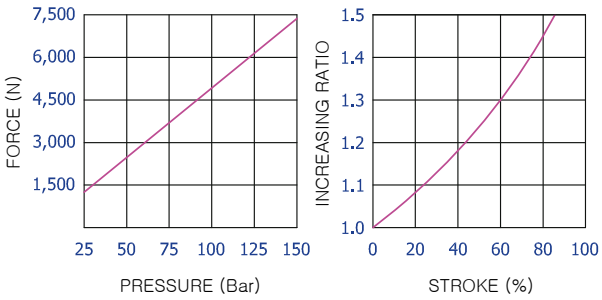


### ■ Calculation of charging pressure for TSM0750

$$\text{Charging pressure(Bar)} = \frac{\text{Initial Force(N)}}{49.1}$$

ex) What comes to the charging pressure of gas spring which demands force 6,000N?

$$122\text{(Bar)} = \frac{6{,}000\text{(N)}}{49.1}$$

22/03/2011

## MD MOUNT WELDED

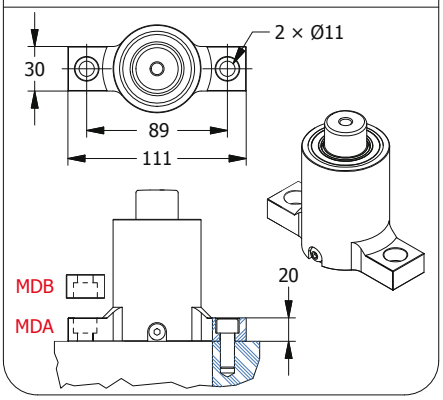


## MS MOUNT WELDED

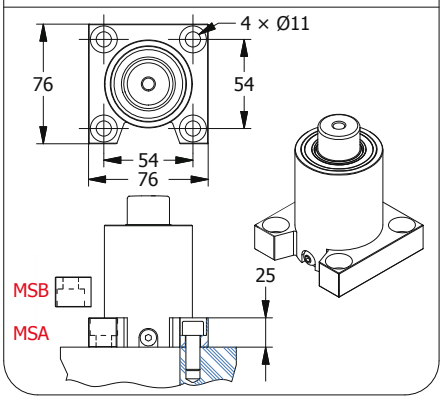


## MT MOUNT WELDED

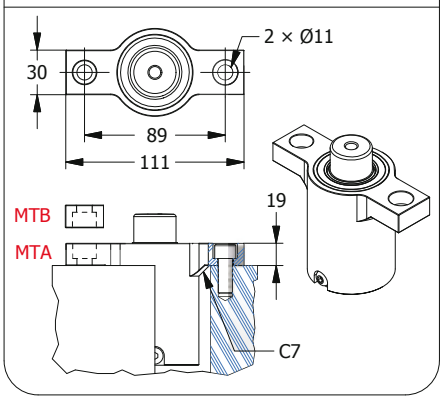


## MR MOUNT WELDED

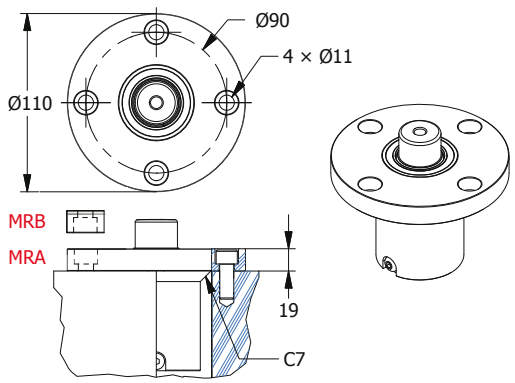


## MK MOUNT WELDED

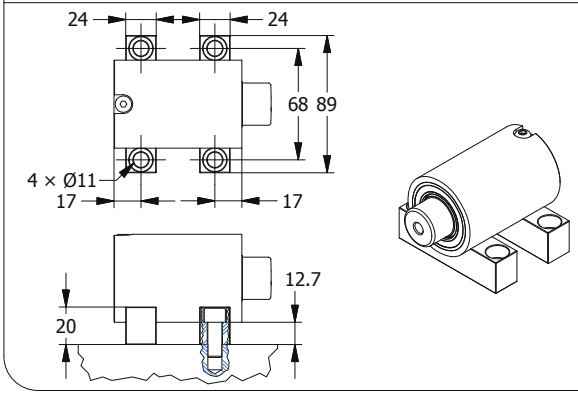


## SP0750M MOUNT

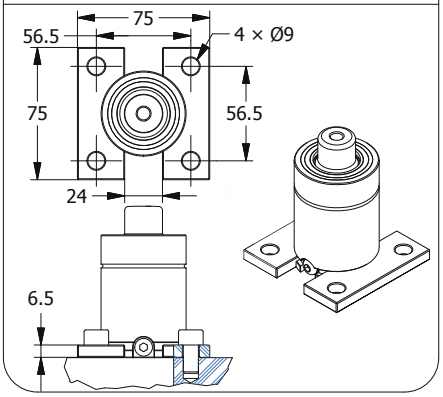


## SB0750 MOUNT

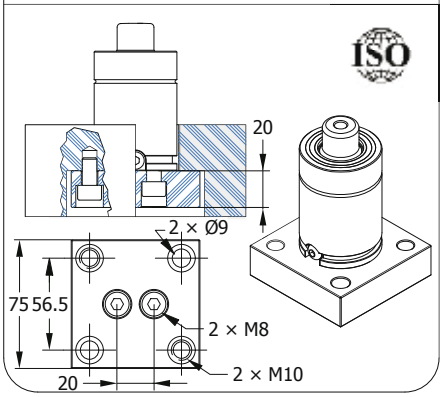


## ST0750 MOUNT

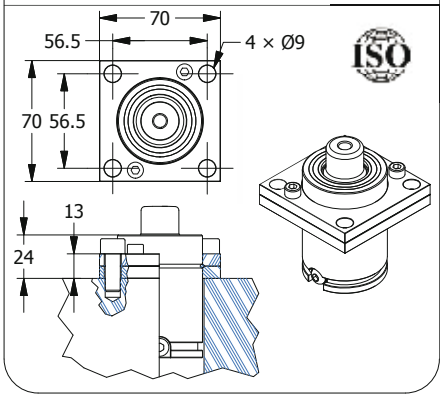


## SR0750 MOUNT

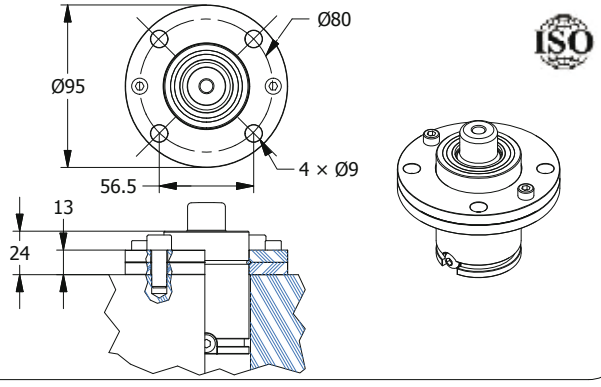


## SC0750 MOUNT

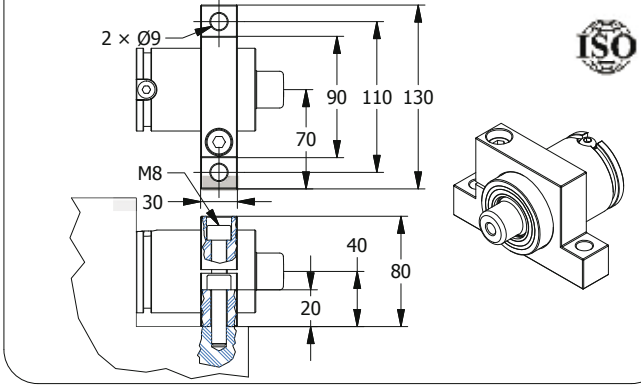


22/03/2011

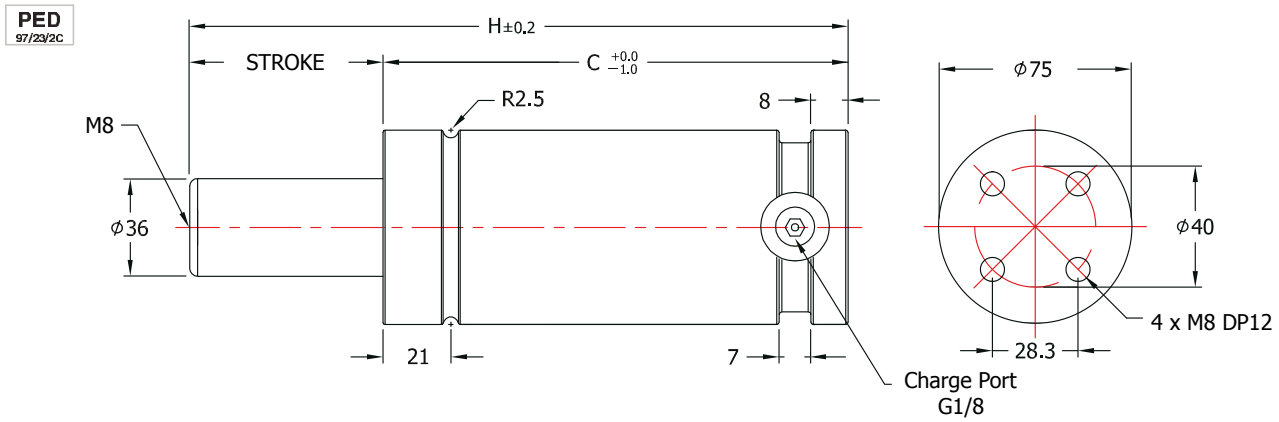


## HOW TO SPECIFY

| | | | | | | | | | |
|---|---|---|---|---|---|---|---|---|---|
| GAS SPRING | TSM1500 | × | 050 | S(F) | – | (MSA) | – | 150 |
| | MODEL | | STROKE | SELF CONTAINED-S FITTING-SYSTEM-F | | MOUNT | | CHARGING PRESSURE (Bar) |
| MOUNT | SP1500 | | | | | | | |
| REPAIR KIT | RCM1500 | | | | | | | |

[Caution!] Charging pressure has to be specified. Otherwise, 150Bar will be charged.

## TSM1500

| Stroke (㎜) | Stroke (inch) | H | C | Force(N) ( 150 bar / +20℃ ) Initial | Force(N) ( 150 bar / +20℃ ) End force* | Gas vol. (㎤) | weight (kg) |
|---|---|---|---|---|---|---|---|
| 10 | 0.39 | 114 | 104 | | 19,000 | 49.9 | 2.00 |
| 13 | 0.51 | 120 | 107 | | 19,500 | 59.2 | 2.95 |
| 15 | 0.59 | 124 | 109 | | 19,700 | 65.4 | 3.02 |
| 20 | 0.79 | 134 | 114 | | 20,200 | 81.0 | 3.13 |
| 25 | 0.98 | 144 | 119 | | 20,500 | 96.6 | 3.20 |
| 30 | 1.18 | 154 | 124 | | 20,800 | 112.2 | 3.32 |
| 35 | 1.38 | 164 | 129 | | 20,900 | 127.7 | 3.38 |
| 38 | 1.50 | 170 | 132 | | 21,000 | 137.1 | 3.47 |
| 40 | 1.57 | 174 | 134 | | 21,100 | 143.3 | 3.49 |
| 45 | 1.77 | 184 | 139 | | 21,200 | 158.9 | 3.58 |
| 50 | 1.97 | 194 | 144 | | 21,300 | 174.5 | 3.65 |
| 60 | 2.36 | 214 | 154 | 15,150 | 21,500 | 205.6 | 3.83 |
| 63 | 2.48 | 220 | 157 | | 21,500 | 215.0 | 3.88 |
| 70 | 2.76 | 234 | 164 | | 21,600 | 236.8 | 4.05 |
| 75 | 2.95 | 244 | 169 | | 21,600 | 252.4 | 4.17 |
| 80 | 3.15 | 254 | 174 | | 21,700 | 267.9 | 4.24 |
| 90 | 3.54 | 274 | 184 | | 21,800 | 299.1 | 4.34 |
| 100 | 3.94 | 294 | 194 | | 21,800 | 330.3 | 4.60 |
| 125 | 4.92 | 344 | 219 | | 21,900 | 408.2 | 5.06 |
| 150 | 5.91 | 394 | 244 | | 22,000 | 486.0 | 5.54 |
| 160 | 6.30 | 414 | 254 | | 22,000 | 517.2 | 5.83 |
| 175 | 6.89 | 444 | 269 | | 22,100 | 563.9 | 6.11 |
| 200 | 7.87 | 494 | 294 | | 22,100 | 641.8 | 6.46 |

* = at full stroke

※ Special type is available upon requested.

### ■ CHARGING PRESSURE/FORCE INCREASE FACTOR

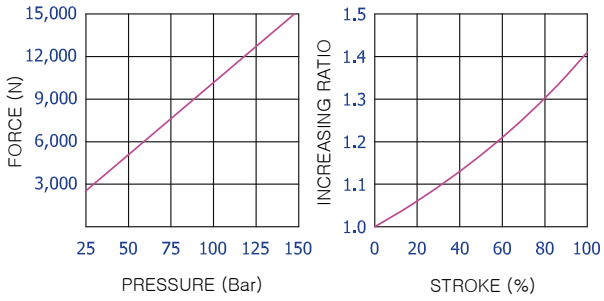


### ■ Calculation of charging pressure for TSM1500

$$\text{Charging pressure(Bar)} = \frac{\text{Initial Force(N)}}{101.7}$$

ex) What comes to the charging pressure of gas spring which demands force 12,000N?

$$118\text{(Bar)} = \frac{12{,}000\text{(N)}}{101.7}$$

22/03/2011

## MD MOUNT WELDED

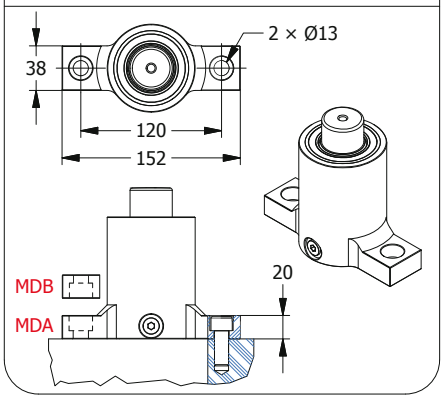


## MS MOUNT WELDED

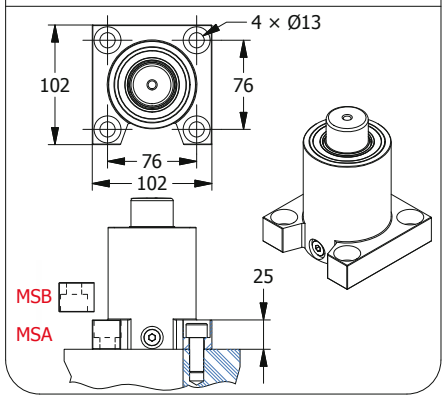


## MT MOUNT WELDED

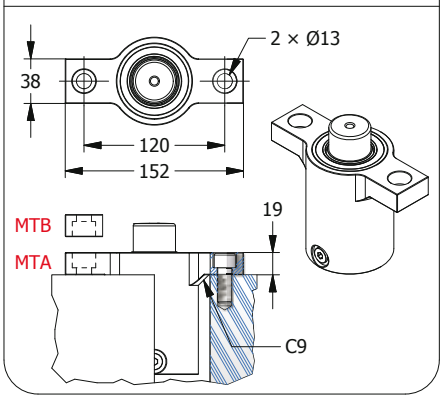


## MR MOUNT WELDED

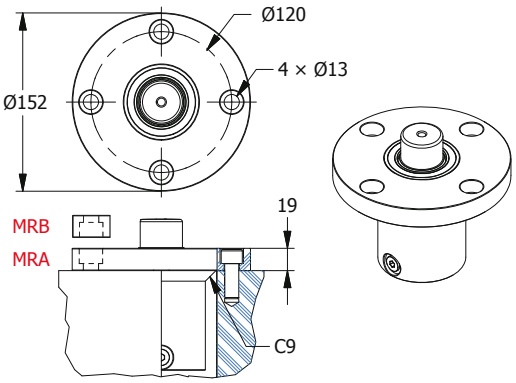


## MK MOUNT WELDED

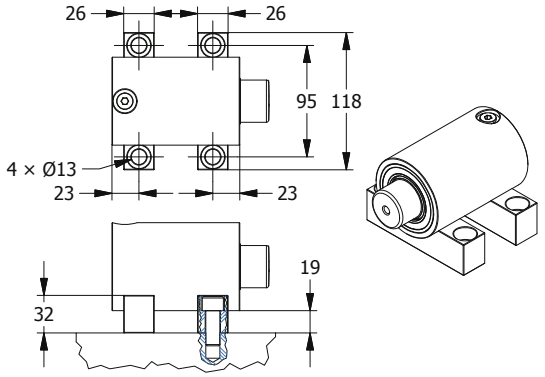


## SP1500 MOUNT

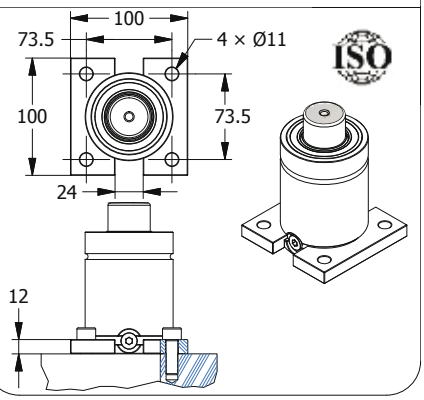


## SB1500 MOUNT

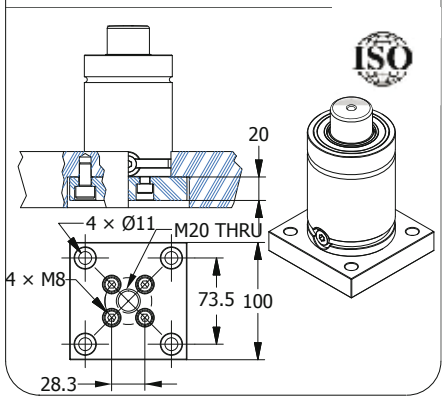


## ST1500 MOUNT

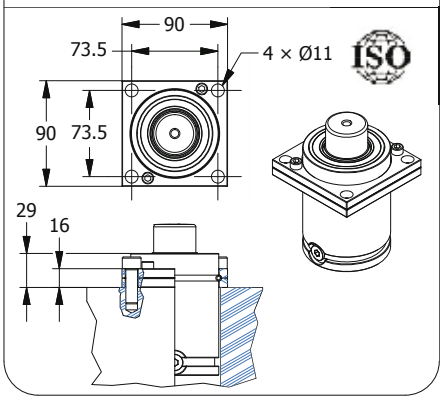


## SR1500 MOUNT

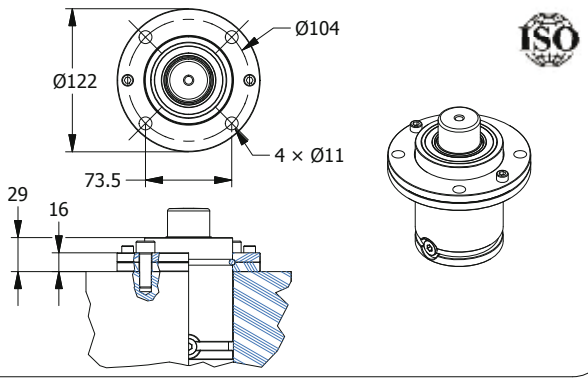


## SC1500 MOUNT

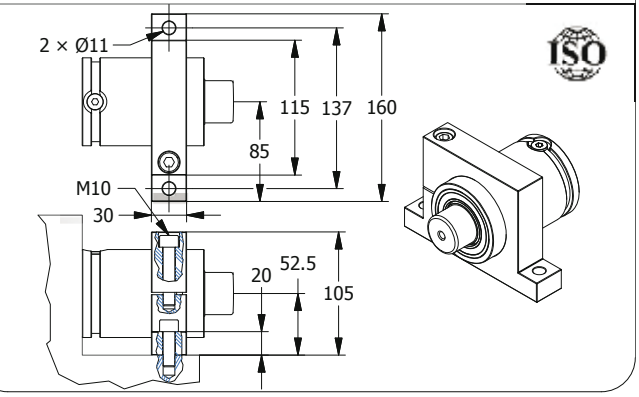


22/03/2011

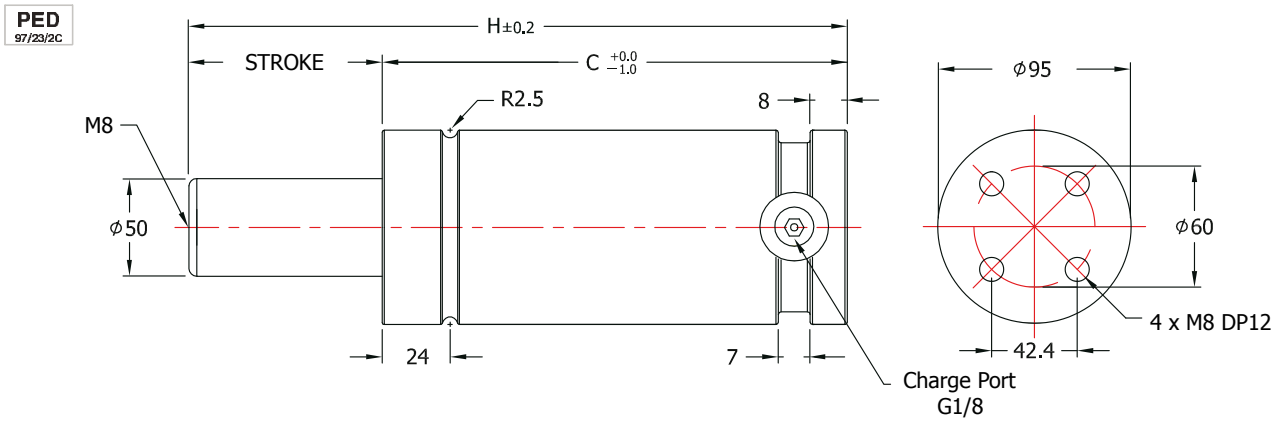


## HOW TO SPECIFY

| | | | | | | | | | |
|---|---|---|---|---|---|---|---|---|---|
| GAS SPRING | TSM3000 | × | 050 | S(F) | — | (MSA) | — | 150 |
| | MODEL | | STROKE | SELF CONTAINED-S FITTING-SYSTEM-F | | MOUNT | | CHARGING PRESSURE (Bar) |
| MOUNT | SP3000 | | | | | | | |
| REPAIR KIT | RCM3000 | | | | | | | |

[Caution!] Charging pressure has to be specified. Otherwise, 150Bar will be charged.

## TSM3000

| Stroke (㎜) | Stroke (inch) | H | C | Force(N) (150 bar / +20℃) Initial | Force(N) (150 bar / +20℃) End force* | Gas vol. (㎤) | weight (kg) |
|---|---|---|---|---|---|---|---|
| 10 | 0.39 | 114 | 104 | | 40,800 | 70.3 | 4.79 |
| 13 | 0.51 | 120 | 107 | | 41,900 | 85.4 | 4.96 |
| 15 | 0.59 | 124 | 109 | | 42,500 | 95.5 | 4.96 |
| 20 | 0.79 | 134 | 114 | | 43,600 | 120.6 | 5.09 |
| 25 | 0.98 | 144 | 119 | | 44,300 | 145.7 | 5.29 |
| 30 | 1.18 | 154 | 124 | | 44,800 | 170.8 | 5.38 |
| 35 | 1.38 | 164 | 129 | | 45,200 | 195.9 | 5.53 |
| 38 | 1.50 | 170 | 132 | | 45,400 | 211.0 | 5.62 |
| 40 | 1.57 | 174 | 134 | | 45,600 | 221.1 | 5.68 |
| 45 | 1.77 | 184 | 139 | | 45,800 | 246.2 | 5.83 |
| 50 | 1.97 | 194 | 144 | | 46,000 | 271.3 | 5.98 |
| 60 | 2.36 | 214 | 154 | 29,400 | 46,400 | 321.5 | 6.27 |
| 63 | 2.48 | 220 | 157 | | 46,400 | 336.6 | 6.36 |
| 70 | 2.76 | 234 | 164 | | 46,600 | 371.8 | 6.57 |
| 75 | 2.95 | 244 | 169 | | 46,700 | 396.9 | 6.72 |
| 80 | 3.15 | 254 | 174 | | 46,800 | 422.0 | 7.07 |
| 90 | 3.54 | 274 | 184 | | 46,900 | 472.3 | 7.40 |
| 100 | 3.94 | 294 | 194 | | 47,000 | 522.5 | 7.76 |
| 125 | 4.92 | 344 | 219 | | 47,300 | 648.1 | 8.48 |
| 150 | 5.91 | 394 | 244 | | 47,400 | 773.7 | 8.93 |
| 160 | 6.30 | 414 | 254 | | 47,500 | 823.9 | 9.23 |
| 175 | 6.89 | 444 | 269 | | 47,500 | 899.3 | 10.11 |
| 200 | 7.87 | 494 | 294 | | 47,600 | 1024.9 | 10.41 |

* = at full stroke

※ Special type is available upon requested.

### ■ CHARGING PRESSURE/FORCE INCREASE FACTOR

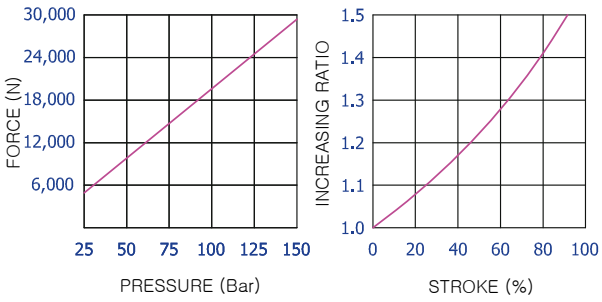


### ■ Calculation of charging pressure for TSM3000

$$\text{Charging pressure(Bar)} = \frac{\text{Initial Force(N)}}{196.2}$$

ex) What comes to the charging pressure of gas spring which demands force 25,000N?

$$127\text{(Bar)} = \frac{25{,}000\text{(N)}}{196.2}$$

22/03/2011

## MD MOUNT WELDED

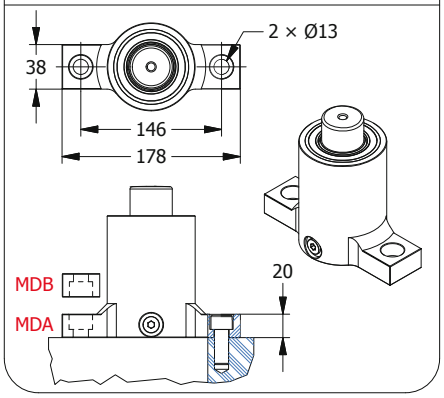


## MS MOUNT WELDED

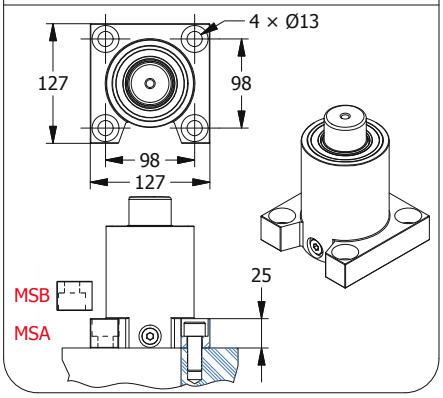


## MT MOUNT WELDED

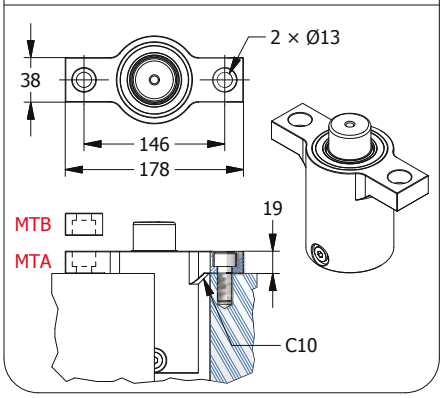


## MR MOUNT WELDED

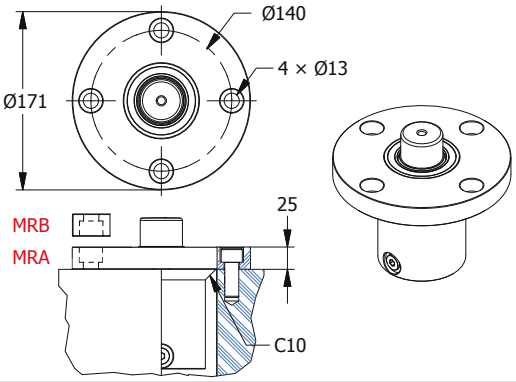


## MK MOUNT WELDED

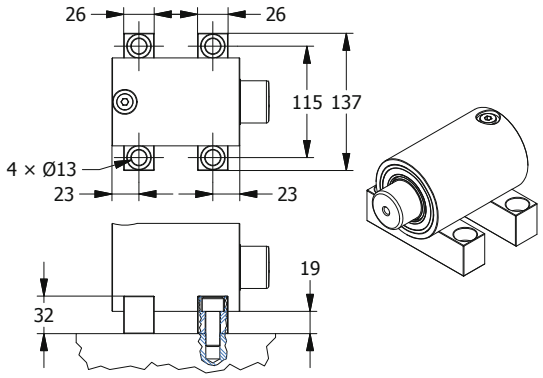


## SP3000 MOUNT

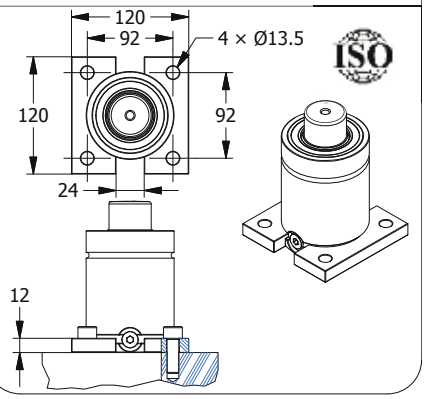


## SB3000 MOUNT

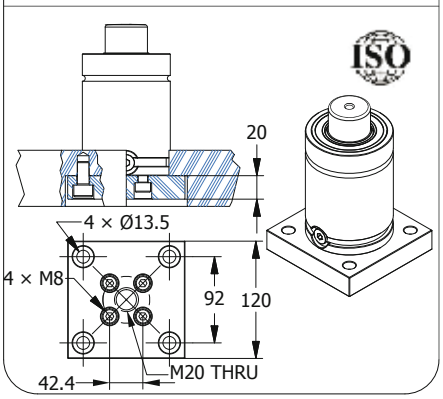


## ST3000 MOUNT

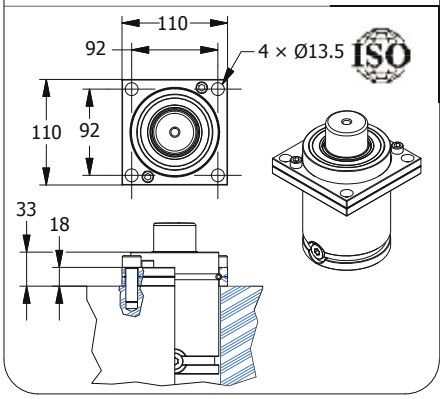


## SR3000 MOUNT

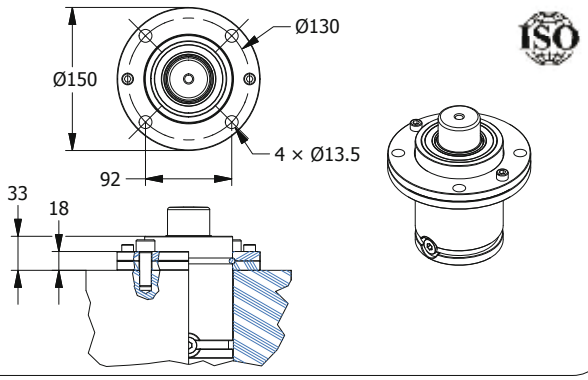


## SC3000 MOUNT

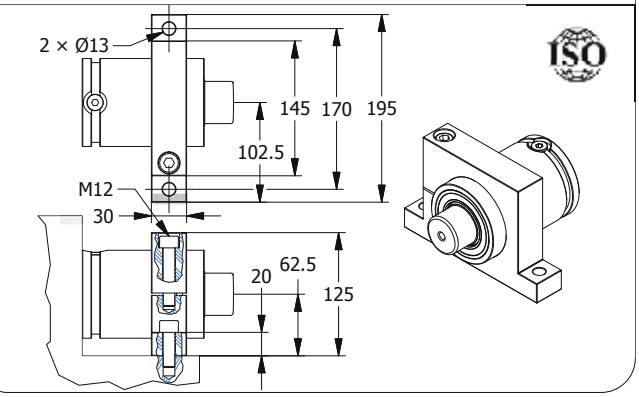


22/03/2011

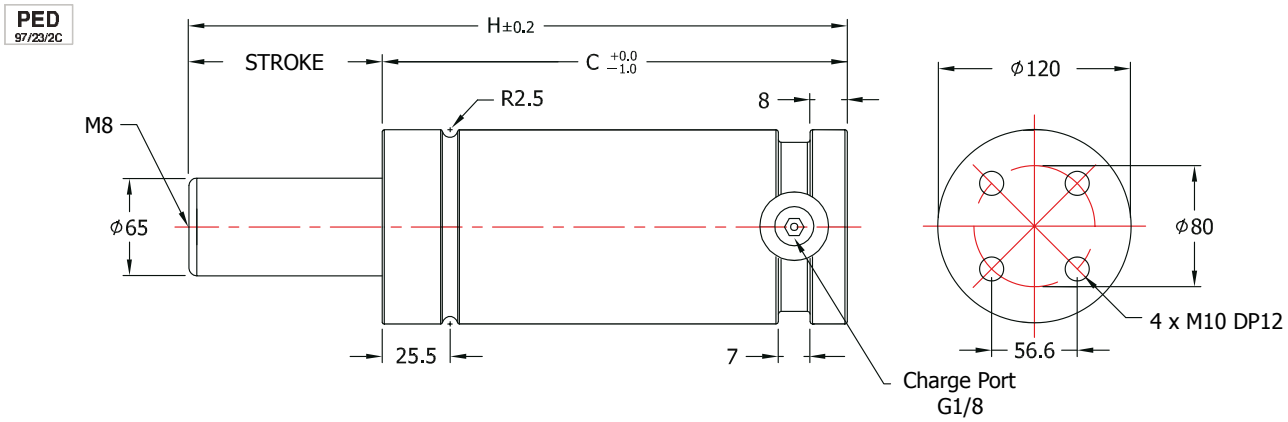


## HOW TO SPECIFY

GAS SPRING — TSM5000 (MODEL) × 050 (STROKE) S(F) (SELF CONTAINED-S FITTING-SYSTEM-F) — (MSA) (MOUNT) — 150 (CHARGING PRESSURE (Bar))

MOUNT — SP5000

REPAIR KIT — RCM5000

[Caution!] Charging pressure has to be specified. Otherwise, 150Bar will be charged.

### TSM5000

| Stroke (㎜) | Stroke (inch) | H | C | Force(N) (150 bar / +20℃) Initial | Force(N) (150 bar / +20℃) End force* | Gas vol. (㎤) | weight (kg) |
|---|---|---|---|---|---|---|---|
| 10 | 0.39 | 117 | 107 | | 67,400 | 125.6 | 7.78 |
| 13 | 0.51 | 123 | 110 | | 69,800 | 149.2 | 7.92 |
| 15 | 0.59 | 127 | 112 | | 71,000 | 164.9 | 8.01 |
| 20 | 0.79 | 137 | 117 | | 73,500 | 204.1 | 8.24 |
| 25 | 0.98 | 147 | 122 | | 75,200 | 243.4 | 8.48 |
| 30 | 1.18 | 157 | 127 | | 76,500 | 282.6 | 8.71 |
| 35 | 1.38 | 167 | 132 | | 77,600 | 321.9 | 8.95 |
| 38 | 1.50 | 173 | 135 | | 78,100 | 345.4 | 9.09 |
| 40 | 1.57 | 177 | 137 | | 78,400 | 361.1 | 9.18 |
| 45 | 1.77 | 187 | 142 | | 79,100 | 400.4 | 9.41 |
| 50 | 1.97 | 197 | 147 | | 79,600 | 439.6 | 9.65 |
| 60 | 2.36 | 217 | 157 | 49,650 | 80,500 | 518.1 | 10.11 |
| 63 | 2.48 | 223 | 160 | | 80,700 | 541.7 | 10.25 |
| 70 | 2.76 | 237 | 167 | | 81,200 | 596.6 | 10.58 |
| 75 | 2.95 | 247 | 172 | | 81,400 | 635.9 | 10.81 |
| 80 | 3.15 | 257 | 177 | | 81,700 | 675.1 | 11.05 |
| 90 | 3.54 | 277 | 187 | | 82,100 | 753.6 | 11.51 |
| 100 | 3.94 | 297 | 197 | | 82,400 | 832.1 | 11.98 |
| 125 | 4.92 | 347 | 222 | | 83,100 | 1028.4 | 13.15 |
| 150 | 5.91 | 397 | 247 | | 83,500 | 1224.6 | 14.32 |
| 160 | 6.30 | 417 | 257 | | 83,600 | 1303.1 | 14.79 |
| 175 | 6.89 | 447 | 272 | | 83,800 | 1420.9 | 15.49 |
| 200 | 7.87 | 497 | 297 | | 84,100 | 1617.1 | 16.65 |

* = at full stroke

※ Special type is available upon requested.

### CHARGING PRESSURE/FORCE INCREASE FACTOR

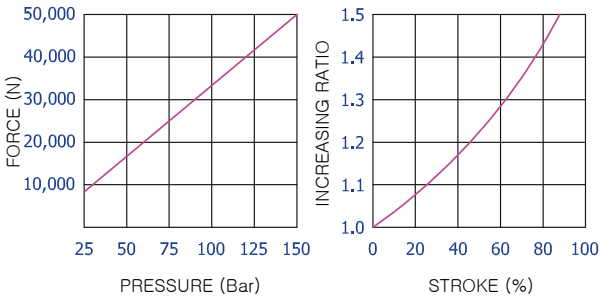


### Calculation of charging pressure for TSM5000

$$\text{Charging pressure(Bar)} = \frac{\text{Initial Force(N)}}{331.7}$$

ex) What comes to the charging pressure of gas spring which demands force 38,000N?

$$115\text{(Bar)} = \frac{38{,}000\text{(N)}}{331.7}$$

22/03/2011

## MD MOUNT WELDED

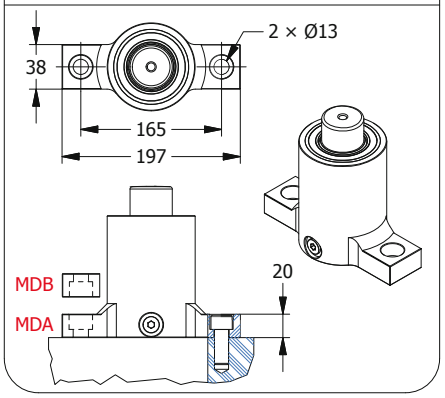


## MS MOUNT WELDED

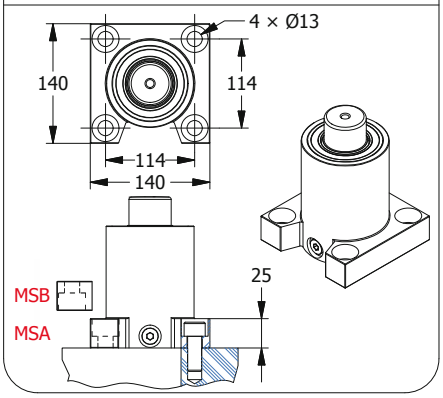


## MT MOUNT WELDED

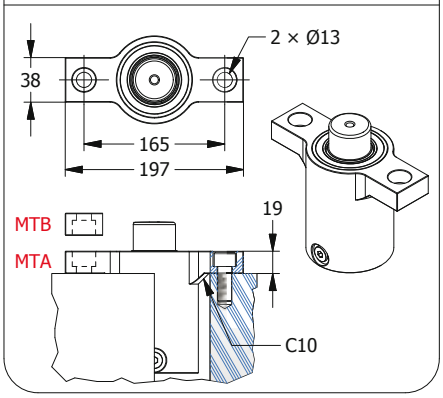


## MR MOUNT WELDED

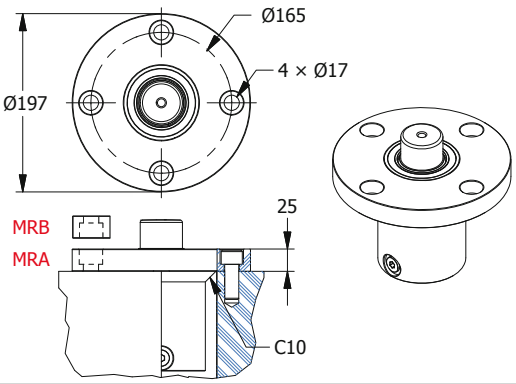


## MK MOUNT WELDED

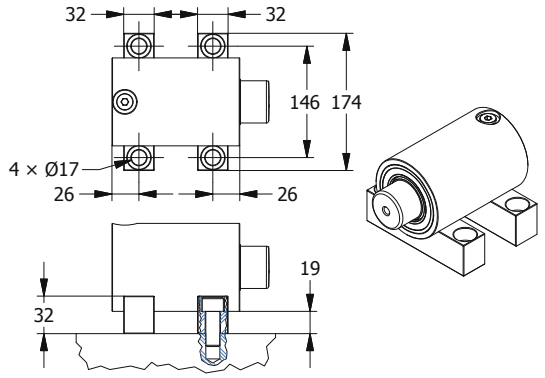


## SP5000 MOUNT

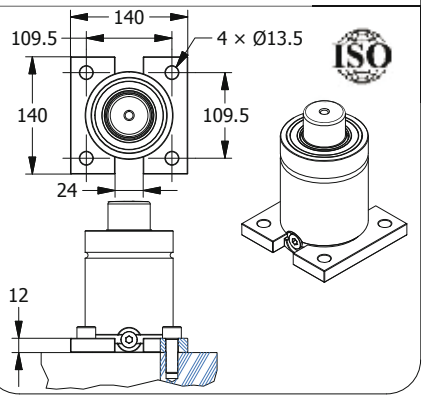


## SB5000 MOUNT

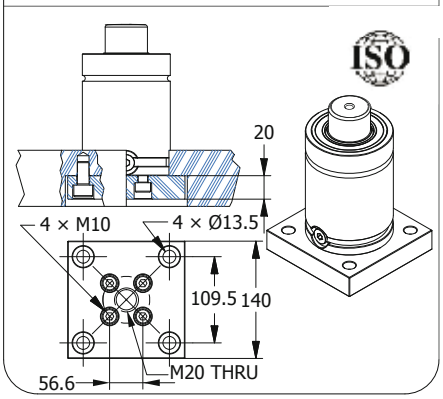


## ST5000 MOUNT

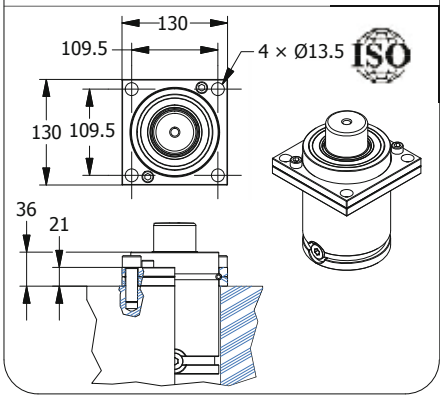


## SR5000 MOUNT

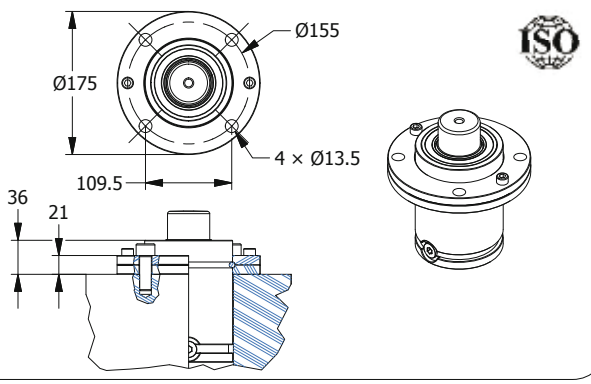


## SC5000 MOUNT

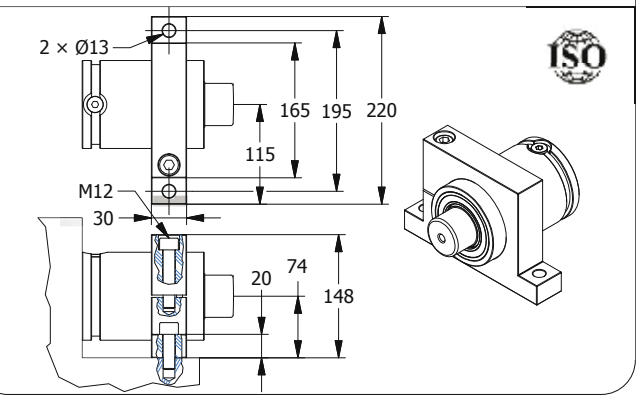


22/03/2011

# EOC Normalien

## TSS Series

PED 97/23/EC

CE

ISO 9001

JAS-ANZ

www.eoc.de

22/03/2011

CONTENTS

# TSS-SERIES

TSS0750 . . . . . .
TSS1500 . . . . . .
TSS3000 . . . . . .
TSS5000 . . . . . .

## TSS STANDARD

MODEL

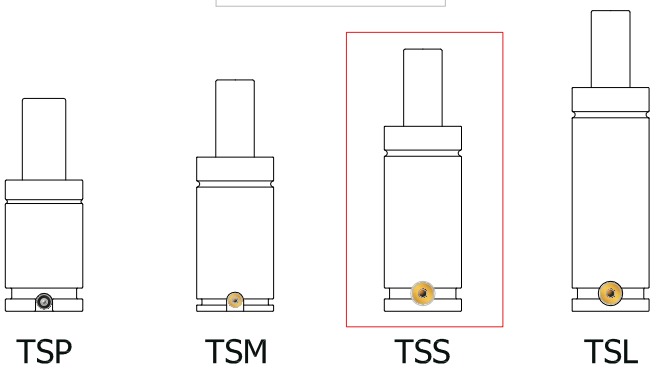


■ General Specification

- Filling Materials: Nitrogen GAs(N2)
- Maximum Stroke Rate Per Minute (Recommended): ~50 to 100 (at 20℃)
- Maximum Filling Pressure: 150~180 bar (at 20℃)
- Piston Rod Speed: 0.03~0.8 m/s
- Minimum Filling Pressure: 25 bar (at 20℃)
- Rod Surface Treatment: Nitrate Coating
- Operation Temperature: -5 to 80℃
- Cylinder Surface Treatment: Oxidized Black Coating
- Pressure Increase as per Temperature: ±0.3% / ℃

■ Specification

| TYPE | Stroke (mm) | Cylinder Diameter Φ(mm) | Rod Φ(mm) | Initial Force (N) | End Force (N) | MAX. Charging Pressure |
|---|---|---|---|---|---|---|
| TSS0750 | 10~200 | 50 | 25 | 7,350 | 11,800 | 150Bar |
| TSS1500 | 10~300 | 75 | 36 | 15,150 | 22,000 | 150Bar |
| TSS3000 | 10~300 | 95 | 50 | 29,400 | 47,000 | 150Bar |
| TSS5000 | 10~300 | 120 | 65 | 49,650 | 84,300 | 150Bar |

※ The above specification is subject to change without notice for performance improvement.

22/03/2011

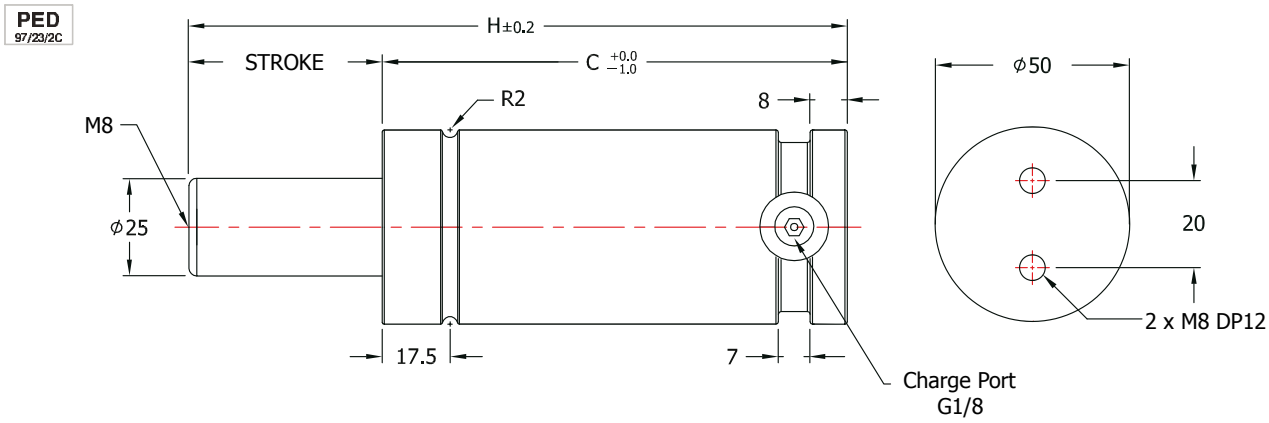


## HOW TO SPECIFY

| | | | | | | | | | |
|---|---|---|---|---|---|---|---|---|---|
| GAS SPRING | TSM1500 (MODEL) | × | 050 (STROKE) | S(F) (SELF CONTAINED-S FITTING-SYSTEM-F) | — | (MSA) (MOUNT) | — | 150 (CHARGING PRESSURE (Bar)) | |
| MOUNT | SP0750 | | | | | | | | |
| REPAIR KIT | RCS0750 | | | | | | | | |

[Caution!] Charging pressure has to be specified. Otherwise, 150Bar will be charged.

**TSS0750**

| Stroke (mm) | Stroke (inch) | H | C | Force(N) (150 bar / +20℃) Initial | Force(N) (150 bar / +20℃) End force* | Gas vol. (㎤) | weight (kg) |
|---|---|---|---|---|---|---|---|
| 10 | 0.39 | 90 | 80 | | 9,500 | 21.4 | 1.00 |
| 12.7 | 0.50 | 95.4 | 82.7 | | 9,800 | 24.7 | 1.00 |
| 15 | 0.59 | 100 | 85 | | 10,000 | 27.6 | 1.02 |
| 20 | 0.79 | 110 | 90 | | 10,300 | 33.9 | 1.06 |
| 25 | 0.98 | 120 | 95 | | 10,600 | 40.2 | 1.12 |
| 30 | 1.18 | 130 | 100 | | 10,800 | 46.5 | 1.16 |
| 35 | 1.38 | 140 | 105 | | 10,900 | 52.8 | 1.20 |
| 38 | 1.50 | 146 | 108 | | 11,000 | 56.5 | 1.24 |
| 40 | 1.57 | 150 | 110 | | 11,000 | 59.0 | 1.26 |
| 45 | 1.77 | 160 | 115 | | 11,100 | 65.3 | 1.30 |
| 50 | 1.97 | 170 | 120 | | 11,200 | 71.6 | 1.36 |
| 60 | 2.36 | 190 | 130 | 7,350 | 11,300 | 84.2 | 1.45 |
| 63 | 2.48 | 196 | 133 | | 11,300 | 87.9 | 1.48 |
| 70 | 2.76 | 210 | 140 | | 11,400 | 96.7 | 1.52 |
| 75 | 2.95 | 220 | 145 | | 11,400 | 103.0 | 1.60 |
| 80 | 3.15 | 230 | 150 | | 11,500 | 109.3 | 1.64 |
| 90 | 3.54 | 250 | 160 | | 11,500 | 121.8 | 1.74 |
| 100 | 3.94 | 270 | 170 | | 11,600 | 134.4 | 1.82 |
| 125 | 4.92 | 320 | 195 | | 11,700 | 165.8 | 2.04 |
| 150 | 5.91 | 370 | 220 | | 11,700 | 197.2 | 2.30 |
| 160 | 6.30 | 390 | 230 | | 11,700 | 209.8 | 2.37 |
| 175 | 6.89 | 420 | 245 | | 11,800 | 228.6 | 2.52 |
| 200 | 7.87 | 470 | 270 | | 11,800 | 260.0 | 2.76 |

* = at full stroke

※ Special type is available upon requested.

### ■ CHARGING PRESSURE/FORCE INCREASE FACTOR

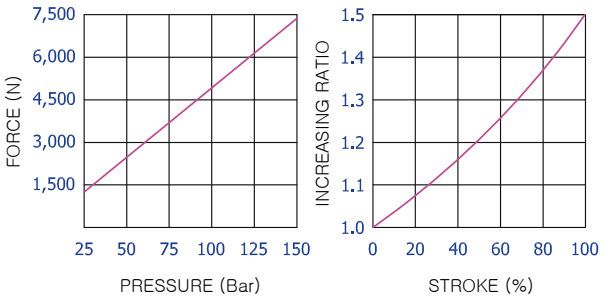


### ■ Calculation of charging pressure for TSS0750

$$\text{Charging pressure(Bar)} = \frac{\text{Initial Force(N)}}{49.1}$$

ex) What comes to the charging pressure of gas spring which demands force 6,000N?

$$122\text{(Bar)} = \frac{6{,}000\text{(N)}}{49.1}$$

22/03/2011

## MD MOUNT WELDED

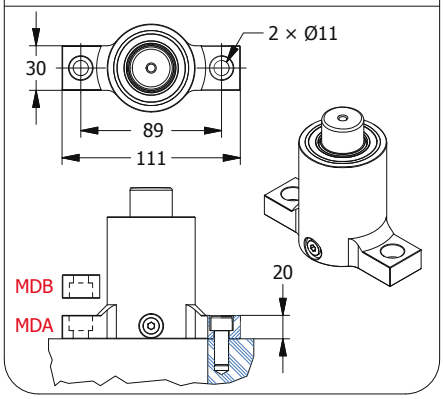


## MS MOUNT WELDED

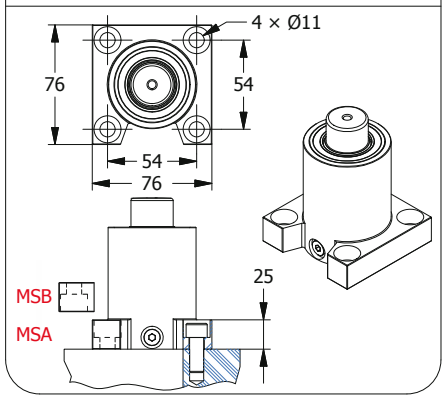


## MT MOUNT WELDED

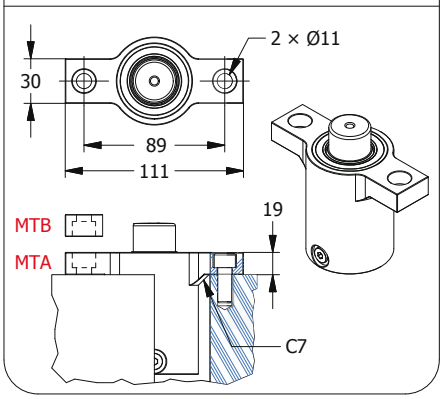


## MR MOUNT WELDED

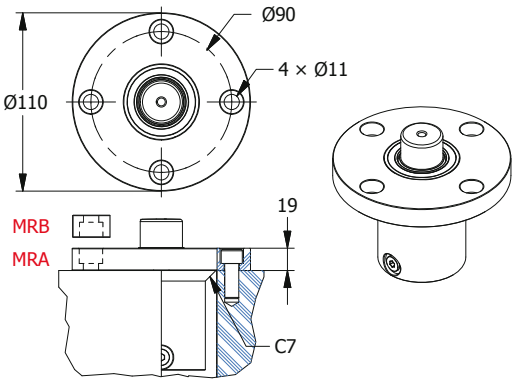


## MK MOUNT WELDED

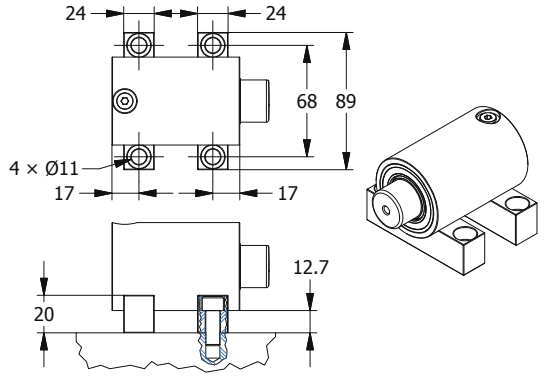


## SP0750 MOUNT

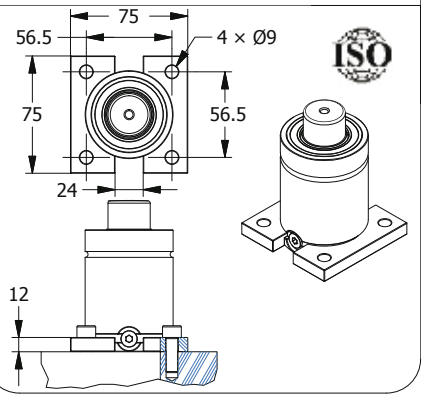


## SB0750 MOUNT

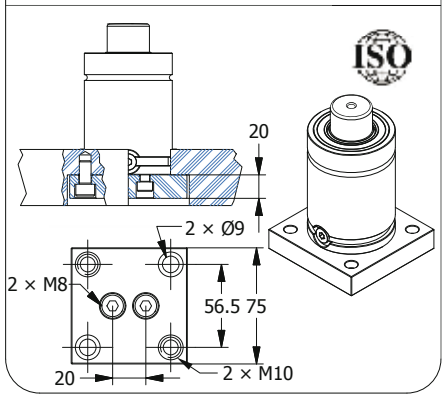


## ST0750 MOUNT

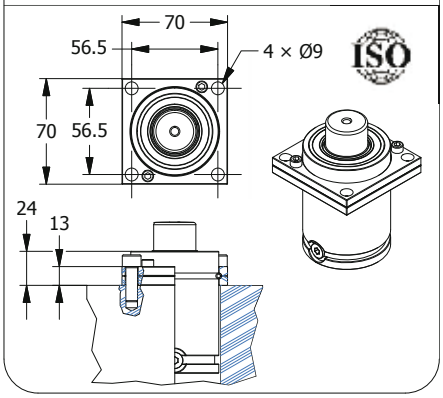


## SR0750 MOUNT

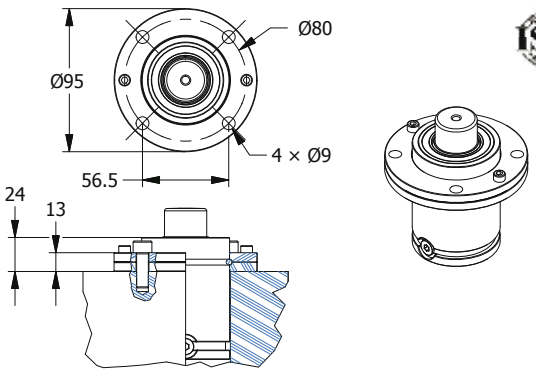


## SC0750 MOUNT

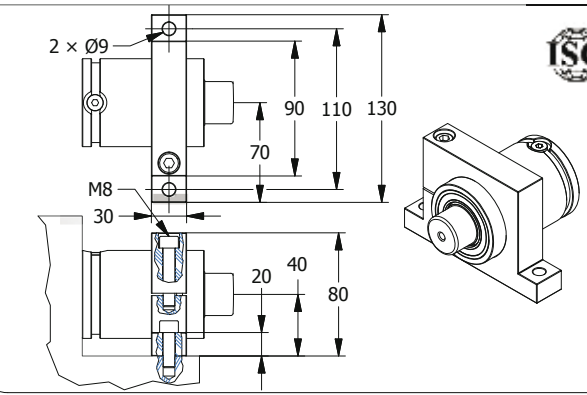


22/03/2011

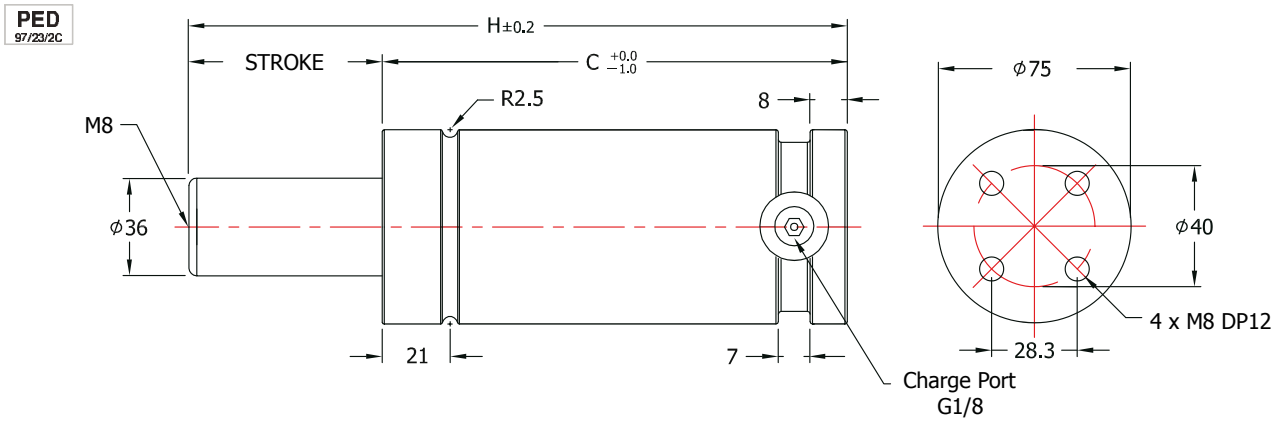


## HOW TO SPECIFY

| | | | | | | | | |
|---|---|---|---|---|---|---|---|---|
| GAS SPRING | TSS1500 | × | 050 | S(F) | — | (MSA) | — | 150 |
| | MODEL | | STROKE | SELF CONTAINED-S FITTING-SYSTEM-F | | MOUNT | | CHARGING PRESSURE (Bar) |
| MOUNT | SP1500 | | | | | | | |
| REPAIR KIT | RCS1500 | | | | | | | |

[Caution!] Charging pressure has to be specified. Otherwise, 150Bar will be charged.

**TSS1500**

| Stroke | | H | C | Force(N) ( 150 bar / +20℃ ) | | Gas vol. (㎤) | weight (kg) |
|---|---|---|---|---|---|---|---|
| (㎜) | (inch) | | | Initial | End force* | | |
| 10 | 0.39 | 122 | 112 | | 17,800 | 68.5 | 3.06 |
| 13 | 0.51 | 127.4 | 114.4 | | 18,300 | 76.0 | 3.09 |
| 15 | 0.59 | 132 | 117 | | 18,500 | 84.1 | 3.13 |
| 20 | 0.79 | 142 | 122 | | 19,000 | 99.7 | 3.24 |
| 25 | 0.98 | 152 | 127 | | 19,400 | 115.3 | 3.33 |
| 30 | 1.18 | 162 | 132 | | 19,700 | 130.9 | 3.42 |
| 35 | 1.38 | 172 | 137 | | 20,000 | 146.4 | 3.50 |
| 38 | 1.50 | 178 | 140 | | 20,100 | 155.8 | 3.59 |
| 40 | 1.57 | 182 | 142 | | 20,200 | 162.0 | 3.62 |
| 45 | 1.77 | 192 | 147 | | 20,400 | 177.6 | 3.70 |
| 50 | 1.97 | 202 | 152 | | 20,500 | 193.2 | 3.80 |
| 60 | 2.36 | 222 | 162 | | 20,800 | 224.3 | 3.99 |
| 63 | 2.48 | 228 | 165 | 15,150 | 20,800 | 233.7 | 4.06 |
| 70 | 2.76 | 242 | 172 | | 20,900 | 255.5 | 4.16 |
| 75 | 2.95 | 252 | 177 | | 21,000 | 271.1 | 4.28 |
| 80 | 3.15 | 262 | 182 | | 21,100 | 286.6 | 4.34 |
| 90 | 3.54 | 282 | 192 | | 21,200 | 317.8 | 4.56 |
| 100 | 3.94 | 302 | 202 | | 21,300 | 349.0 | 4.73 |
| 125 | 4.92 | 352 | 227 | | 21,500 | 426.8 | 5.20 |
| 150 | 5.91 | 402 | 252 | | 21,600 | 504.7 | 5.62 |
| 160 | 6.30 | 422 | 262 | | 21,700 | 535.9 | 5.80 |
| 175 | 6.89 | 452 | 277 | | 21,700 | 582.6 | 6.16 |
| 200 | 7.87 | 502 | 302 | | 21,800 | 660.5 | 6.50 |
| 250 | 9.84 | 602 | 352 | | 21,900 | 816.3 | 7.39 |
| 300 | 11.8 | 702 | 402 | | 22,000 | 972.1 | 8.27 |

* = at full stroke

※ Special type is available upon requested.

### ■ CHARGING PRESSURE/FORCE INCREASE FACTOR

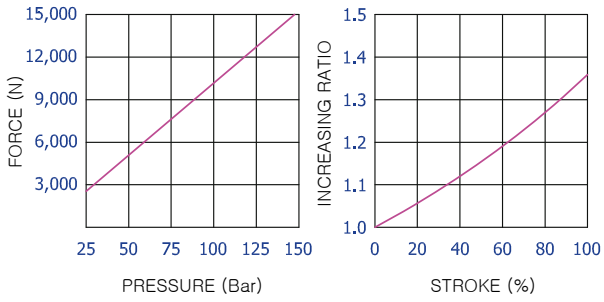


### ■ Calculation of charging pressure for TSS1500

$$\text{Charging pressure(Bar)} = \frac{\text{Initial Force(N)}}{101.7}$$

ex) What comes to the charging pressure of gas spring which demands force 12,000N?

$$118\text{(Bar)} = \frac{12{,}000\text{(N)}}{101.7}$$

22/03/2011

## MD MOUNT WELDED

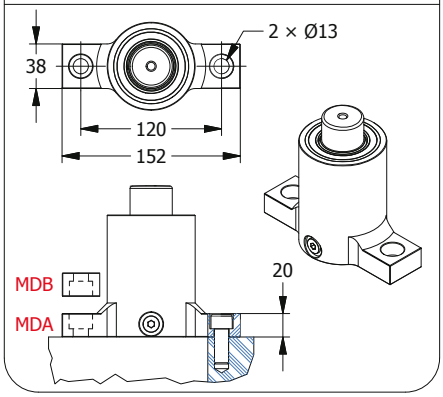


## MS MOUNT WELDED

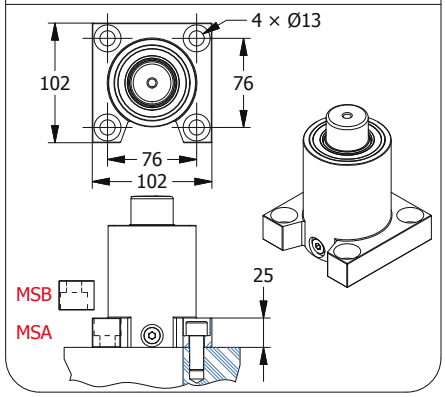


## MT MOUNT WELDED

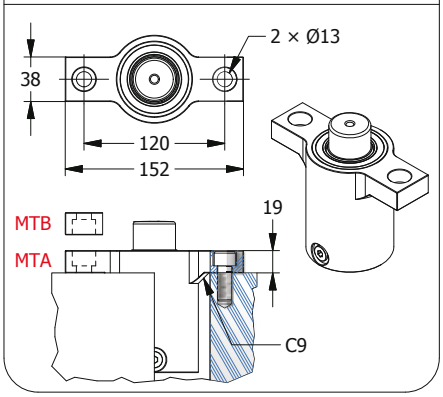


## MR MOUNT WELDED

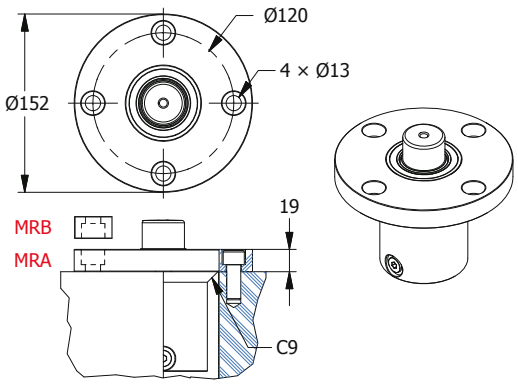


## MK MOUNT WELDED

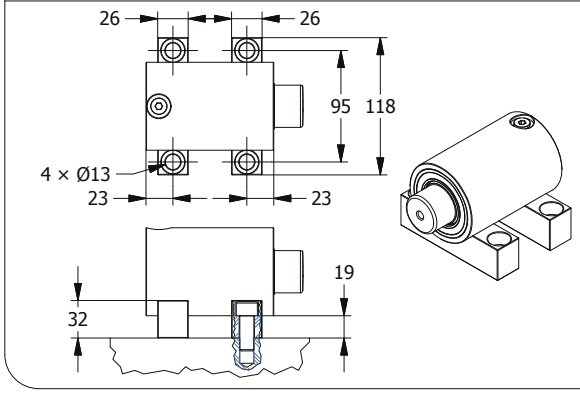


## SP1500 MOUNT

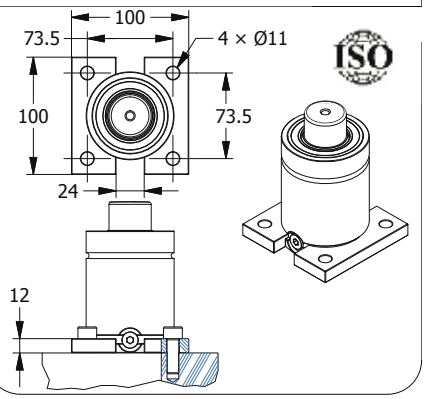


## SB1500 MOUNT

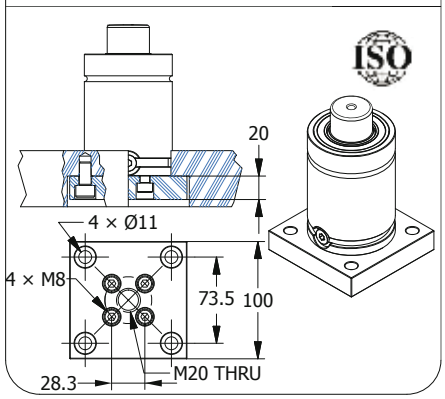


## ST1500 MOUNT

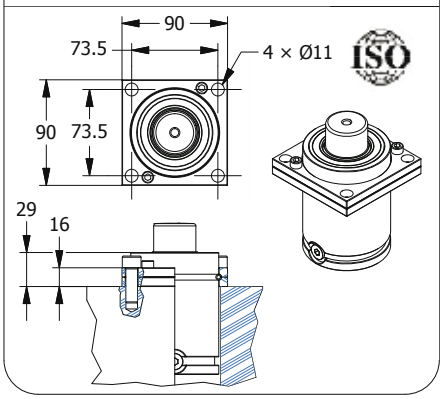


## SR1500 MOUNT

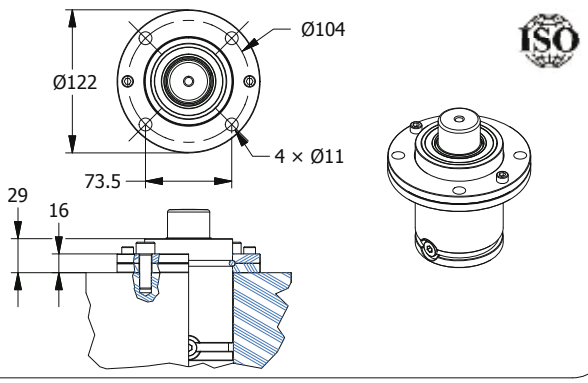


## SC1500 MOUNT

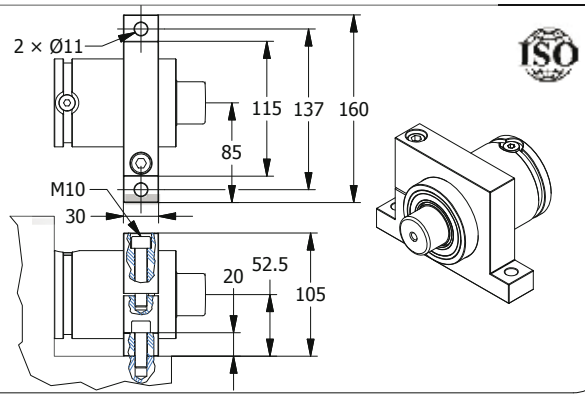


22/03/2011

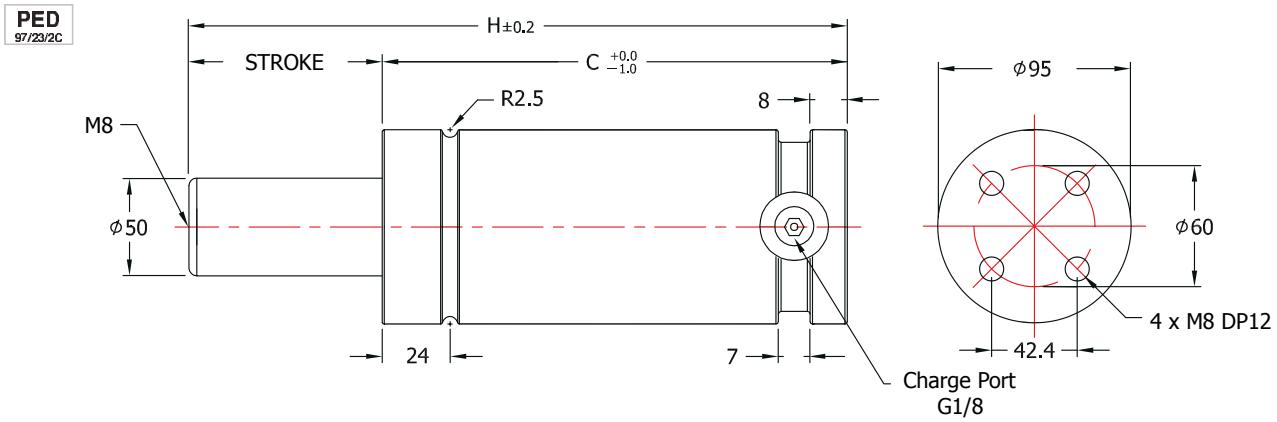


## HOW TO SPECIFY

| | | | | | | | | |
|---|---|---|---|---|---|---|---|---|
| GAS SPRING | TSS3000 (MODEL) | × | 050 (STROKE) | S(F) (SELF CONTAINED-S FITTING-SYSTEM-F) | — | (MSA) (MOUNT) | — | 150 (CHARGING PRESSURE (Bar)) |
| MOUNT | SP3000 | | | | | | | |
| REPAIR KIT | RCS3000 | | | | | | | |

[Caution!] Charging pressure has to be specified. Otherwise, 150Bar will be charged.

**TSS3000**

| Stroke (mm) | Stroke (inch) | H | C | Force(N) (150 bar / +20℃) Initial | Force(N) (150 bar / +20℃) End force* | Gas vol. (㎤) | weight (kg) |
|---|---|---|---|---|---|---|---|
| 10 | 0.39 | 122 | 112 | | 35,700 | 110.5 | 5.07 |
| 13 | 0.51 | 127.5 | 114.5 | | 37,100 | 123.1 | 5.08 |
| 15 | 0.59 | 132 | 117 | | 37,500 | 135.6 | 5.18 |
| 20 | 0.79 | 142 | 122 | | 38,900 | 160.8 | 5.38 |
| 25 | 0.98 | 152 | 127 | | 39,900 | 185.9 | 5.54 |
| 30 | 1.18 | 162 | 132 | | 40,800 | 211.0 | 5.69 |
| 35 | 1.38 | 172 | 137 | | 41,400 | 236.1 | 5.85 |
| 38 | 1.50 | 178 | 140 | | 41,800 | 251.2 | 5.90 |
| 40 | 1.57 | 182 | 142 | | 42,000 | 261.2 | 5.93 |
| 45 | 1.77 | 192 | 147 | | 42,500 | 286.4 | 6.16 |
| 50 | 1.97 | 202 | 152 | | 42,900 | 311.5 | 6.22 |
| 60 | 2.36 | 222 | 162 | | 43,600 | 361.7 | 6.52 |
| 63 | 2.48 | 228 | 165 | 29,400 | 43,700 | 376.8 | 6.70 |
| 70 | 2.76 | 242 | 172 | | 44,100 | 412.0 | 6.94 |
| 75 | 2.95 | 252 | 177 | | 44,300 | 437.1 | 7.10 |
| 80 | 3.15 | 262 | 182 | | 44,500 | 462.2 | 7.26 |
| 90 | 3.54 | 282 | 192 | | 44,800 | 512.4 | 7.51 |
| 100 | 3.94 | 302 | 202 | | 45,100 | 562.7 | 7.86 |
| 125 | 4.92 | 352 | 227 | | 45,600 | 688.3 | 8.66 |
| 150 | 5.91 | 402 | 252 | | 46,000 | 813.9 | 9.45 |
| 160 | 6.30 | 422 | 262 | | 46,100 | 864.1 | 9.76 |
| 175 | 6.89 | 452 | 277 | | 46,300 | 939.5 | 10.23 |
| 200 | 7.87 | 502 | 302 | | 46,500 | 1065.1 | 11.01 |
| 250 | 9.84 | 602 | 352 | | 46,800 | 1316.3 | 12.53 |
| 300 | 11.8 | 702 | 402 | | 47,000 | 1567.5 | 14.14 |

* = at full stroke

※ Special type is available upon requested.

### ■ CHARGING PRESSURE/FORCE INCREASE FACTOR

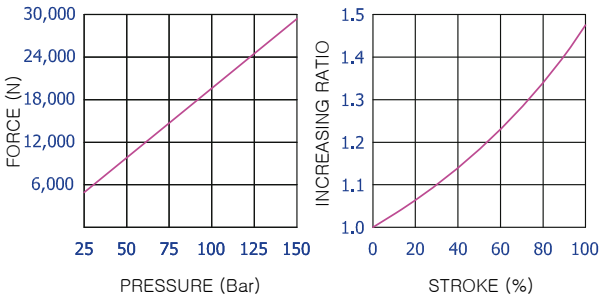


### ■ Calculation of charging pressure for TSS3000

$$\text{Charging pressure(Bar)} = \frac{\text{Initial Force(N)}}{196.2}$$

ex) What comes to the charging pressure of gas spring which demands force 25,000N?

$$127\text{(Bar)} = \frac{25{,}000\text{(N)}}{196.2}$$

22/03/2011

## MD MOUNT WELDED

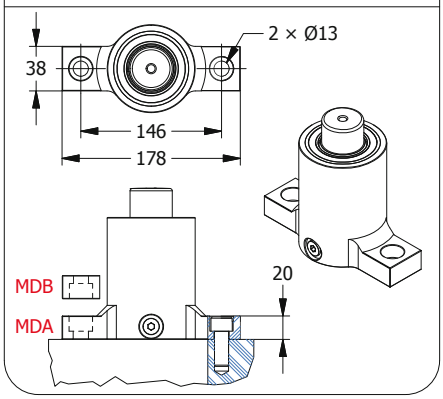


## MS MOUNT WELDED

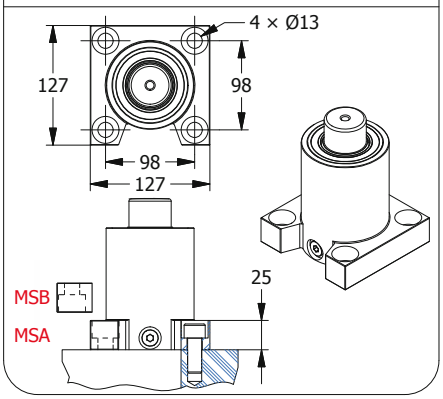


## MT MOUNT WELDED

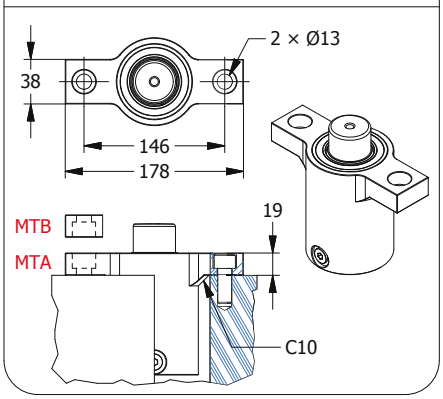


## MR MOUNT WELDED

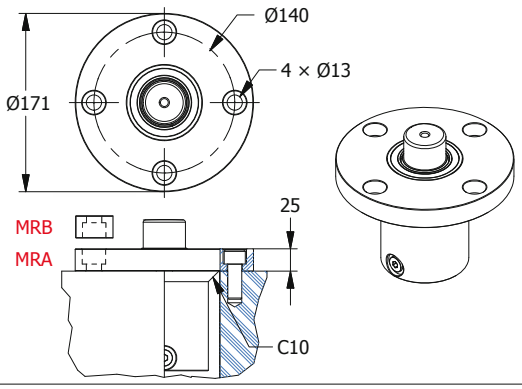


## MK MOUNT WELDED

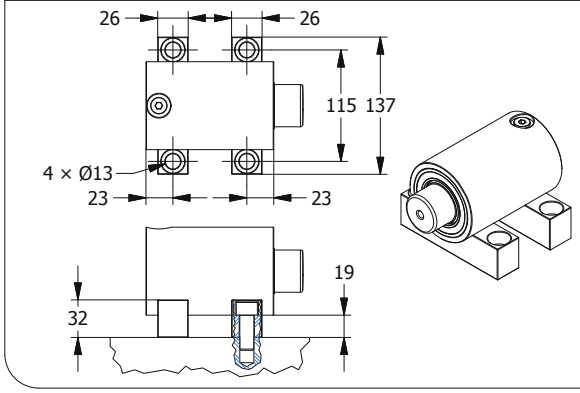


## SP3000 MOUNT

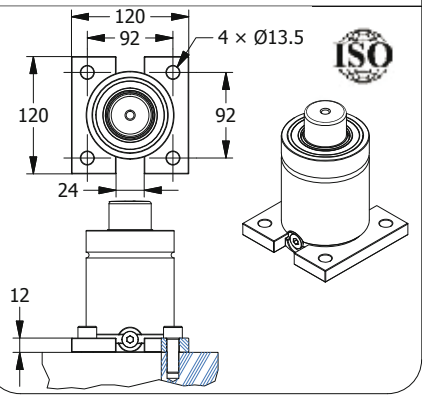


## SB3000 MOUNT

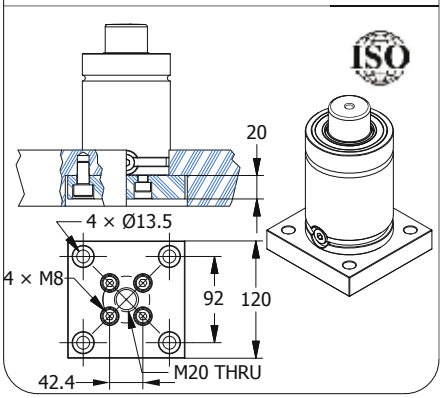


## ST3000 MOUNT

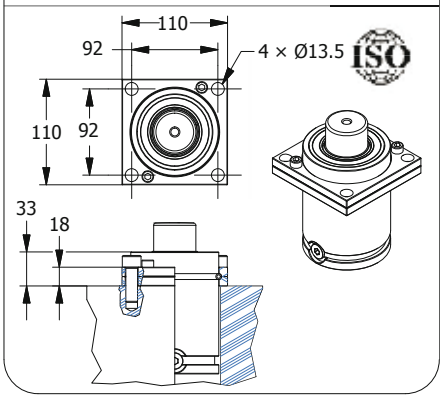


## SR3000 MOUNT

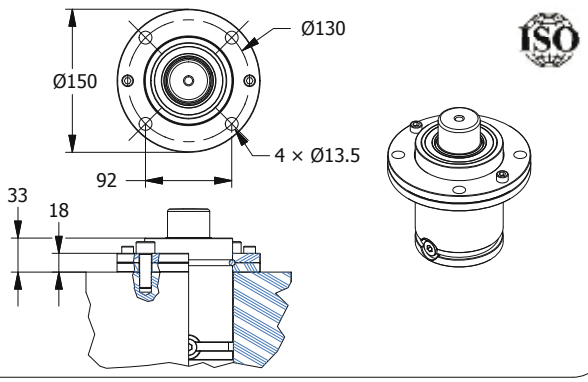


## SC3000 MOUNT

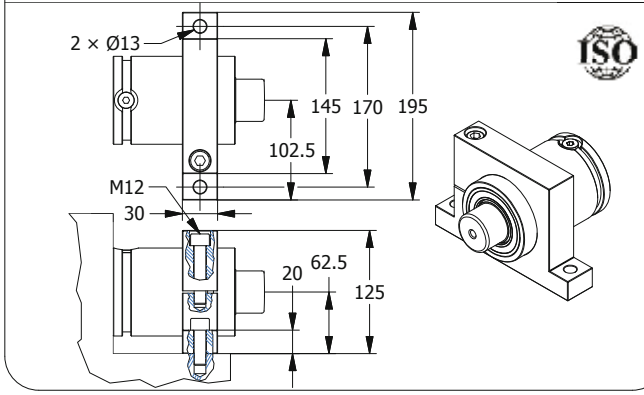


22/03/2011

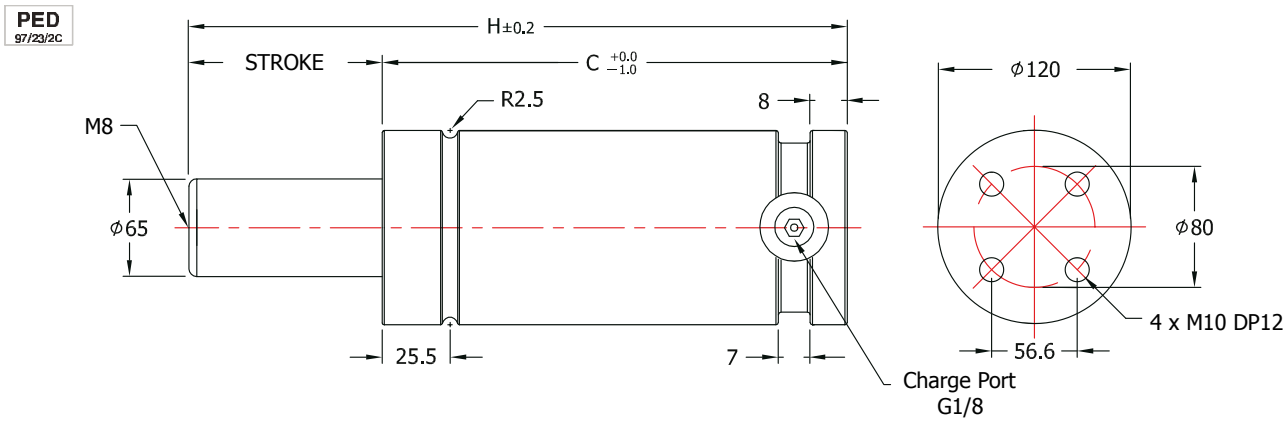


## HOW TO SPECIFY

| | | | | | | | | | |
|---|---|---|---|---|---|---|---|---|---|
| GAS SPRING | TSS5000 | × | 050 | S(F) | — | (MSA) | — | 150 | |
| | MODEL | | STROKE | SELF CONTAINED-S FITTING-SYSTEM-F | | MOUNT | | CHARGING PRESSURE (Bar) | |
| MOUNT | SP5000 | | | | | | | | |
| REPAIR KIT | RCS5000 | | | | | | | | |

[Caution!] Charging pressure has to be specified. Otherwise, 150Bar will be charged.

**TSS5000**

| Stroke | | H | C | Force(N) ( 150 bar / +20℃ ) | | Gas vol. (㎤) | weight (kg) |
|---|---|---|---|---|---|---|---|
| (㎜) | (inch) | | | Initial | End force* | | |
| 10 | 0.39 | 121.5 | 111.5 | | 65,400 | 137.4 | 8.22 |
| 13 | 0.51 | 127.5 | 114.5 | | 67,800 | 160.9 | 8.37 |
| 15 | 0.59 | 132 | 117 | | 68,500 | 180.6 | 8.47 |
| 20 | 0.79 | 142 | 122 | | 71,000 | 219.8 | 8.72 |
| 25 | 0.98 | 152 | 127 | | 73,000 | 259.1 | 9.00 |
| 30 | 1.18 | 162 | 132 | | 74,400 | 298.3 | 9.21 |
| 35 | 1.38 | 172 | 137 | | 75,600 | 337.6 | 9.68 |
| 38 | 1.50 | 178 | 140 | | 76,200 | 361.1 | 9.71 |
| 40 | 1.57 | 182 | 142 | | 76,500 | 376.8 | 9.71 |
| 45 | 1.77 | 192 | 147 | | 77,300 | 416.1 | 9.95 |
| 50 | 1.97 | 202 | 152 | | 78,000 | 455.3 | 10.34 |
| 60 | 2.36 | 222 | 162 | | 79,100 | 533.8 | 10.69 |
| 63 | 2.48 | 228 | 165 | 49,650 | 79,300 | 557.4 | 10.84 |
| 70 | 2.76 | 242 | 172 | | 79,900 | 612.3 | 11.19 |
| 75 | 2.95 | 252 | 177 | | 80,200 | 651.6 | 11.44 |
| 80 | 3.15 | 262 | 182 | | 80,500 | 690.8 | 11.97 |
| 90 | 3.54 | 282 | 192 | | 81,000 | 769.3 | 12.18 |
| 100 | 3.94 | 302 | 202 | | 81,400 | 847.8 | 12.67 |
| 125 | 4.92 | 352 | 227 | | 82,200 | 1044.1 | 13.91 |
| 150 | 5.91 | 402 | 252 | | 82,800 | 1240.3 | 15.14 |
| 160 | 6.30 | 422 | 262 | | 83,000 | 1318.8 | 15.63 |
| 175 | 6.89 | 452 | 277 | | 83,200 | 1436.6 | 16.38 |
| 200 | 7.87 | 502 | 302 | | 83,500 | 1632.8 | 17.61 |
| 250 | 9.84 | 602 | 352 | | 84,000 | 2025.3 | 20.08 |
| 300 | 11.81 | 702 | 402 | | 84,300 | 2417.8 | 22.55 |

* = at full stroke

※ Special type is available upon requested.

### ■ CHARGING PRESSURE/FORCE INCREASE FACTOR

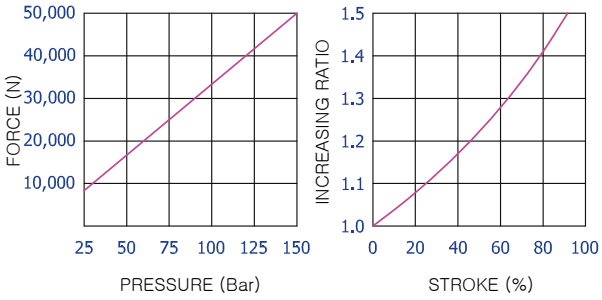


### ■ Calculation of charging pressure for TSS5000

$$\text{Charging pressure(Bar)} = \frac{\text{Initial Force(N)}}{331.7}$$

ex) What comes to the charging pressure of gas spring which demands force 38,000N?

$$115\text{(Bar)} = \frac{38{,}000\text{(N)}}{331.7}$$

22/03/2011

## MD MOUNT WELDED

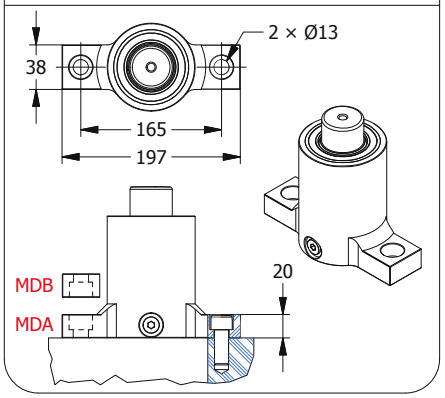


## MS MOUNT WELDED

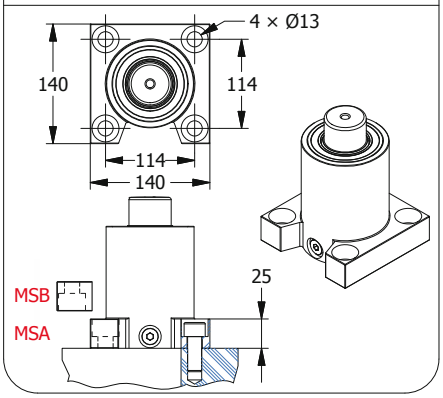


## MT MOUNT WELDED

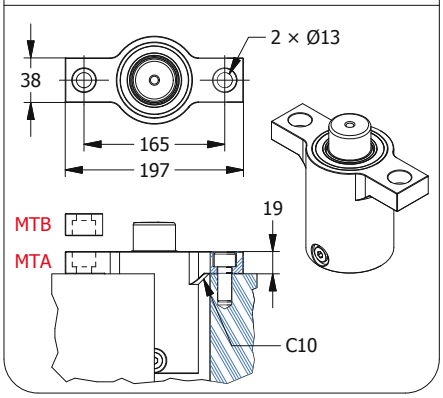


## MR MOUNT WELDED

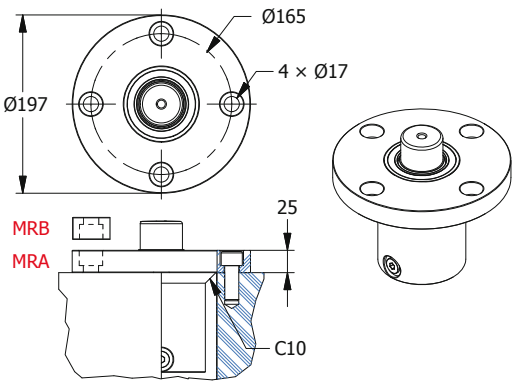


## MK MOUNT WELDED

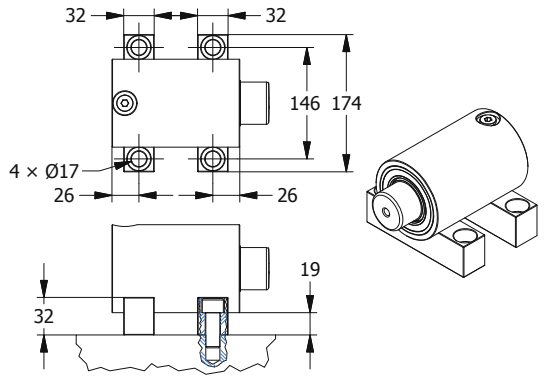


## SP5000 MOUNT

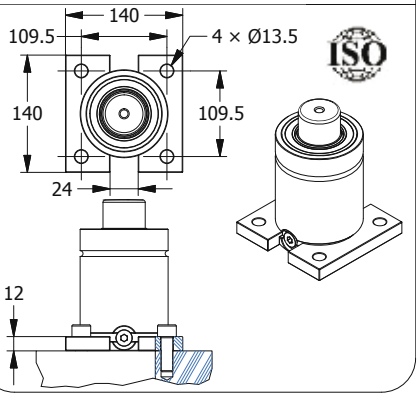


## SB5000 MOUNT

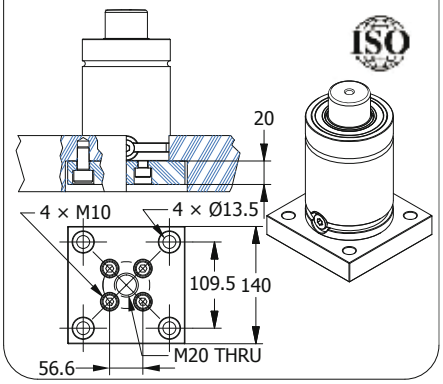


## ST5000 MOUNT

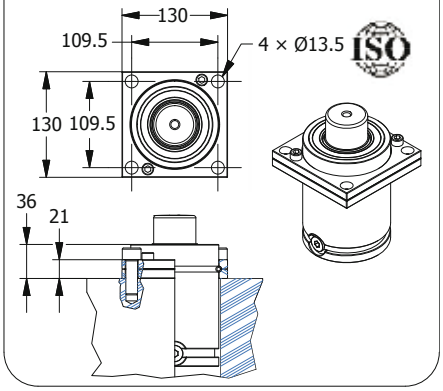


## SR5000 MOUNT

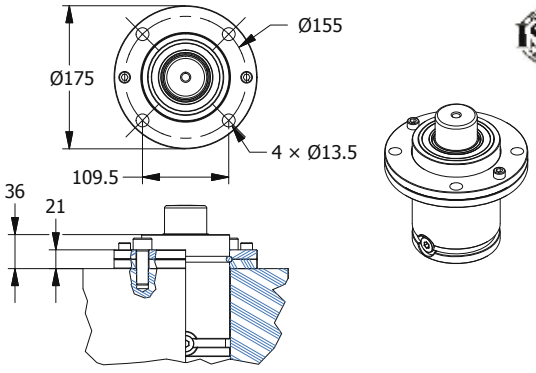


## SC5000 MOUNT

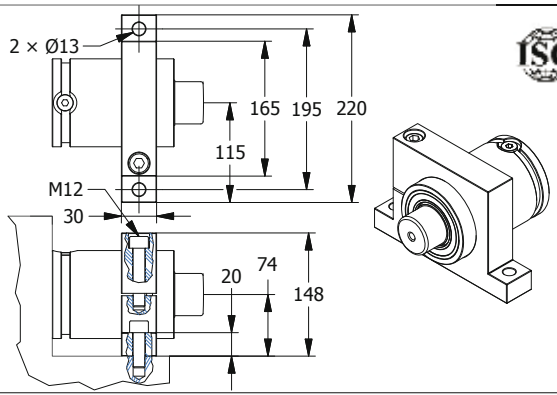


22/03/2011

# EOC Normalien

## TSL Series

PED 97/23/EC

CE

ISO 9001

JAS-ANZ

www.eoc.de

22/03/2011

CONTENTS

# TSL-SERIES

TSL0500 . . . . . .
TSL0750 . . . . . .
TSL1500 . . . . . .
TSL3000 . . . . . .
TSL5000 . . . . . .
TSL7500 . . . . . .
TSL10000 . . . . . .

## ISO STANDARD

### MODEL

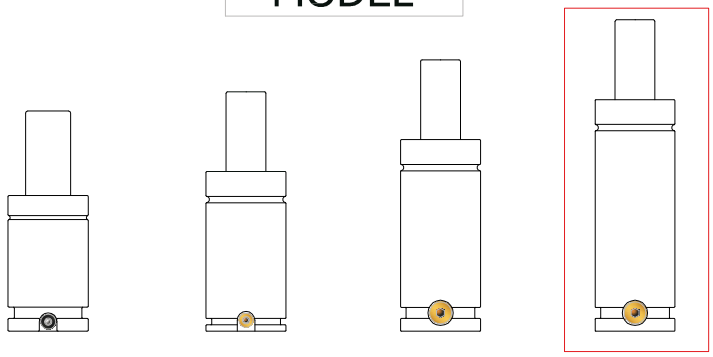


■ Specification

■ General Specification

- Filling Materials: Nitrogen GAs(N2)
- Maximum Stroke Rate Per Minute (Recommended): ~50 to 100 (at 20℃)
- Maximum Filling Pressure: 150~180 bar (at 20℃)
- Piston Rod Speed: 0.03~0.8 m/s
- Minimum Filling Pressure: 25 bar (at 20℃)
- Rod Surface Treatment: Nitrate Coating
- Operation Temperature: -5 to 80℃
- Cylinder Surface Treatment: Oxidized Black Coating
- Pressure Increase as per Temperature: ±0.3% / ℃

| TYPE | Stroke (mm) | Cylinder Diameter Φ(mm) | Rod Φ(mm) | Initial Force (N) | End Force (N) | MAX. Charging Pressure |
|---|---|---|---|---|---|---|
| TSL0500 | 10~125 | 45 | 20 | 4,650 | 6,200 | 150Bar |
| TSL0750 | 10~300 | 50 | 25 | 7,350 | 11,500 | 150Bar |
| TSL1500 | 10~300 | 75 | 36 | 15,150 | 22,100 | 150Bar |
| TSL3000 | 10~300 | 95 | 50 | 29,400 | 47,300 | 150Bar |
| TSL5000 | 10~300 | 120 | 65 | 49,650 | 83,900 | 150Bar |
| TSL7500 | 15~300 | 150 | 80 | 75,300 | 123,900 | 150Bar |
| TSL10000 | 20~300 | 195 | 95 | 106,200 | 156,600 | 150Bar |

※ The above specification is subject to change without notice for performance improvement.

22/03/2011

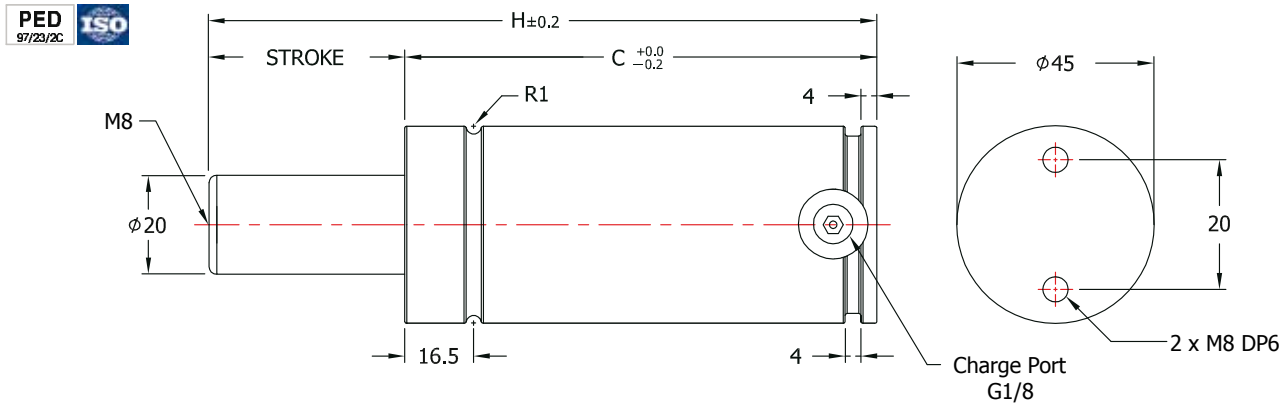


## HOW TO SPECIFY

| | | | | | | | |
|---|---|---|---|---|---|---|---|
| GAS SPRING | TSL0500 (MODEL) | × | 050 (STROKE) | S(F) (SELF CONTAINED-S FITTING-SYSTEM-F) | — | 150 (CHARGING PRESSURE (Bar)) |
| MOUNT | SP0500 | | | | | |
| REPAIR KIT | RCL0500 | | | | | |

[Caution!] Charging pressure has to be specified. Otherwise, 150Bar will be charged.

**TSL 0500**

| Stroke (㎜) | Stroke (inch) | H | C | Force(N) (150 bar / +20℃) Initial | Force(N) (150 bar / +20℃) End force* | Gas vol. (㎤) | Weight (kg) | ISO |
|---|---|---|---|---|---|---|---|---|
| 10 | 0.39 | 105 | 95 | 4,650 | 5,100 | 33.9 | 0.89 | |
| 15 | 0.59 | 115 | 100 | | 5,300 | 39.2 | 0.94 | |
| 20 | 0.79 | 125 | 105 | | 5,400 | 44.6 | 0.98 | |
| 25 | 0.98 | 135 | 110 | | 5,500 | 50.0 | 0.98 | √ |
| 30 | 1.18 | 145 | 115 | | 5,600 | 55.3 | 1.10 | |
| 35 | 1.38 | 155 | 120 | | 5,700 | 60.7 | 1.13 | |
| 38 | 1.50 | 161 | 123 | | 5,700 | 63.9 | 1.16 | |
| 40 | 1.57 | 165 | 125 | | 5,700 | 66.1 | 1.16 | |
| 45 | 1.77 | 175 | 130 | | 5,800 | 71.5 | 1.19 | |
| 50 | 1.97 | 185 | 135 | | 5,800 | 76.8 | 1.21 | √ |
| 60 | 2.36 | 205 | 145 | | 5,900 | 87.6 | 1.23 | |
| 63 | 2.48 | 211 | 148 | | 5,900 | 90.8 | 1.25 | |
| 70 | 2.76 | 225 | 155 | | 6,000 | 98.3 | 1.31 | |
| 80 | 3.15 | 245 | 165 | | 6,000 | 109.1 | 1.38 | √ |
| 90 | 3.54 | 265 | 175 | | 6,100 | 119.8 | 1.45 | |
| 100 | 3.94 | 285 | 185 | | 6,100 | 130.6 | 1.51 | |
| 110 | 4.33 | 305 | 195 | | 6,100 | 141.3 | 1.58 | |
| 120 | 4.72 | 325 | 205 | | 6,200 | 152.1 | 1.64 | |
| 125 | 4.92 | 335 | 210 | | 6,200 | 157.4 | 1.67 | |
| 160 | 6.30 | 405 | 245 | | 6,200 | 195.1 | 1.89 | |

* = at full stroke

※ Special type is available upon requested.

### ■ CHARGING PRESSURE/FORCE INCREASE FACTOR

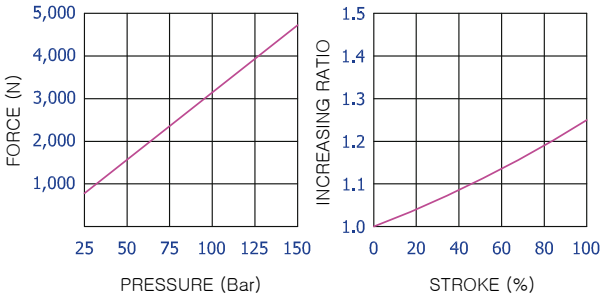


### ■ Calculation of charging pressure for TSL0500

$$\text{Charging pressure(Bar)} = \frac{\text{Initial Force(N)}}{31.4}$$

ex) What comes to the charging pressure of gas spring which demands force 4,000N?

$$127\text{(Bar)} = \frac{4{,}000\text{(N)}}{31.4}$$

22/03/2011

## SP0500 MOUNT

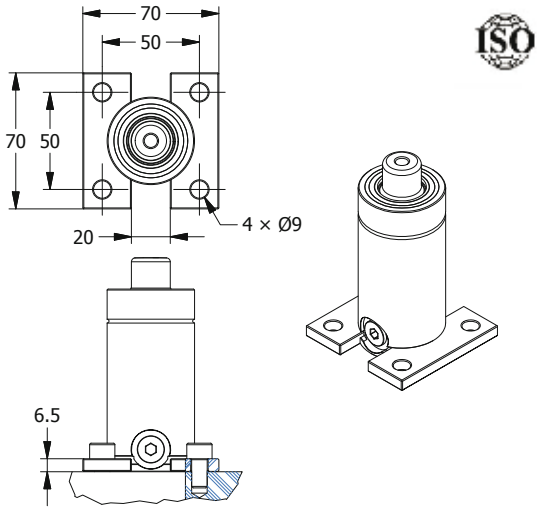


## SR0500 MOUNT

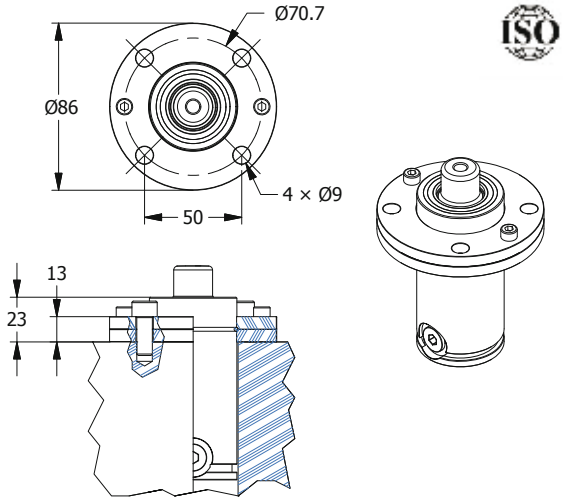


## ST0500 MOUNT

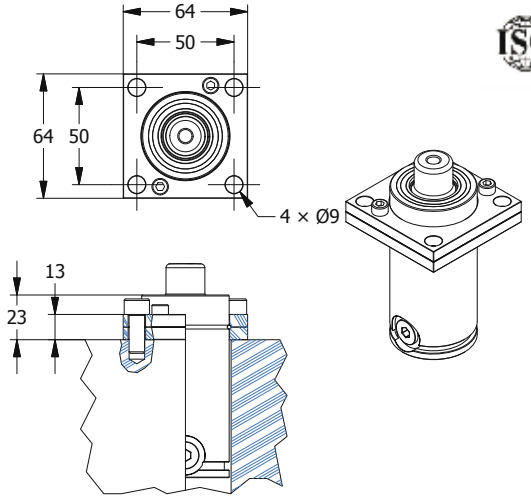


## SB0500 MOUNT

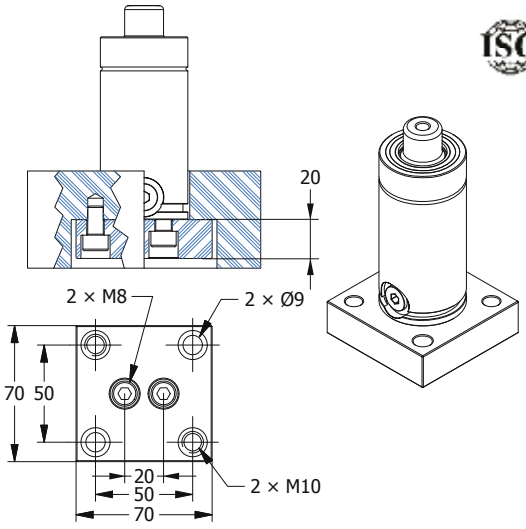


## SC0500 MOUNT

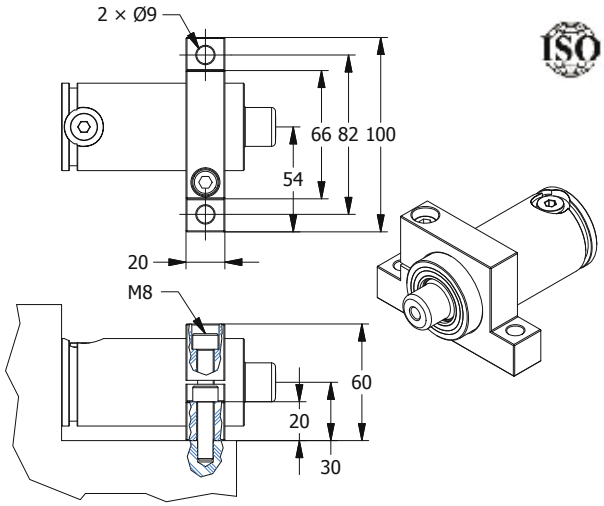


22/03/2011

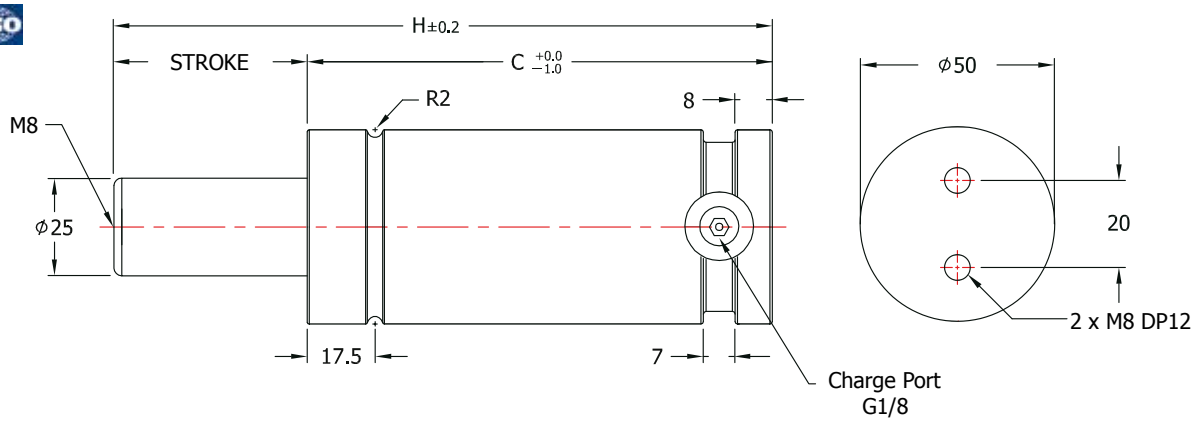


## HOW TO SPECIFY

| | | | | | | | | |
|---|---|---|---|---|---|---|---|---|
| GAS SPRING | TSL0750 | × | 050 | S(F) | — | (MSA) | — | 150 |
| | MODEL | | STROKE | SELF CONTAINED-S FITTING-SYSTEM-F | | MOUNT | | CHARGING PRESSURE (Bar) |
| MOUNT | SP0750 | | | | | | | |
| REPAIR KIT | RCL0750 | | | | | | | |

[Caution!] Charging pressure has to be specified. Otherwise, 150Bar will be charged.

### TSL 0750

| Stroke (㎜) | Stroke (inch) | H | C | Force(N) (150 bar / +20℃) Initial | Force(N) (150 bar / +20℃) End force* | Gas vol. (㎤) | Weight (kg) | ISO |
|---|---|---|---|---|---|---|---|---|
| 10 | 0.39 | 115 | 105 | | 8,400 | 40.2 | 1.32 | |
| 12.7 | 0.50 | 120.4 | 107.7 | | 8,600 | 43.6 | 1.34 | |
| 15 | 0.59 | 125 | 110 | | 8,700 | 46.5 | 1.35 | |
| 20 | 0.79 | 135 | 115 | | 9,000 | 52.8 | 1.40 | |
| 25 | 0.98 | 145 | 120 | | 9,300 | 59.0 | 1.44 | √ |
| 30 | 1.18 | 155 | 125 | | 9,500 | 65.3 | 1.50 | |
| 35 | 1.38 | 165 | 130 | | 9,700 | 71.6 | 1.54 | |
| 38 | 1.50 | 171 | 133 | | 9,800 | 75.4 | 1.58 | |
| 40 | 1.57 | 175 | 135 | | 9,800 | 77.9 | 1.59 | |
| 45 | 1.77 | 185 | 140 | | 10,000 | 84.2 | 1.64 | |
| 50 | 1.97 | 195 | 145 | | 10,100 | 90.4 | 1.68 | √ |
| 60 | 2.36 | 215 | 155 | | 10,300 | 103.0 | 1.78 | |
| 63 | 2.48 | 222 | 158 | 7,350 | 10,300 | 106.8 | 1.82 | |
| 70 | 2.76 | 235 | 165 | | 10,500 | 115.6 | 1.87 | |
| 75 | 2.95 | 245 | 170 | | 10,500 | 121.8 | 1.91 | |
| 80 | 3.15 | 255 | 175 | | 10,600 | 128.1 | 1.98 | √ |
| 90 | 3.54 | 275 | 185 | | 10,700 | 140.7 | 2.06 | |
| 100 | 3.94 | 295 | 195 | | 10,800 | 153.2 | 2.14 | √ |
| 125 | 4.92 | 345 | 220 | | 11,000 | 184.6 | 2.30 | √ |
| 150 | 5.91 | 395 | 245 | | 11,100 | 216.0 | 2.61 | |
| 160 | 6.30 | 415 | 255 | | 11,200 | 228.6 | 2.72 | √ |
| 175 | 6.89 | 445 | 270 | | 11,200 | 247.4 | 2.84 | |
| 200 | 7.87 | 495 | 295 | | 11,300 | 278.8 | 3.08 | |
| 250 | 9.84 | 595 | 345 | | 11,500 | 341.6 | 3.60 | |
| 300 | 11.81 | 695 | 395 | | 11,500 | 404.4 | 4.07 | |

* = at full stroke

※ Special type is available upon requested.

### ■ CHARGING PRESSURE/FORCE INCREASE FACTOR

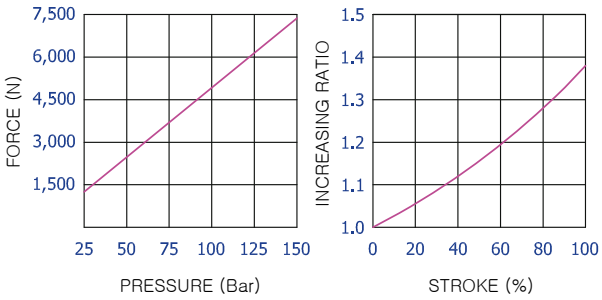


### ■ Calculation of charging pressure for TSL0750

$$\text{Charging pressure(Bar)} = \frac{\text{Initial Force(N)}}{49.1}$$

ex) What comes to the charging pressure of gas spring which demands force 6,000N?

$$122\text{(Bar)} = \frac{6{,}000\text{(N)}}{49.1}$$

22/03/2011

## MD MOUNT WELDED

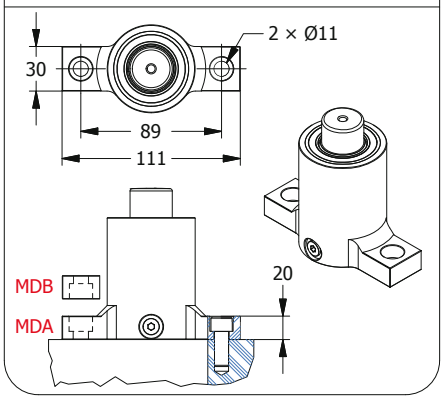


## MS MOUNT WELDED

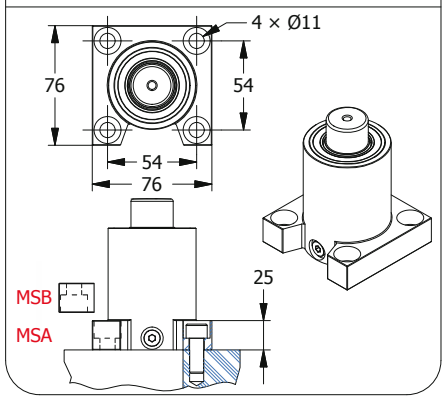


## MT MOUNT WELDED

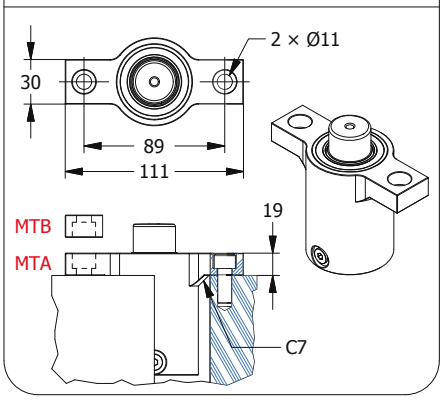


## MR MOUNT WELDED

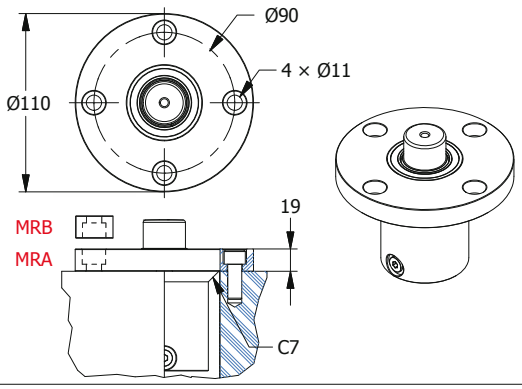


## MK MOUNT WELDED

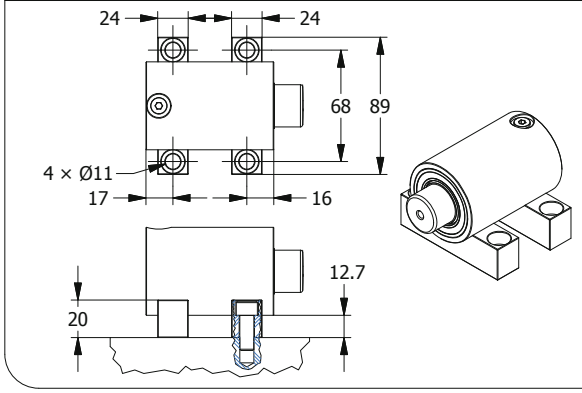


## SP0750 MOUNT

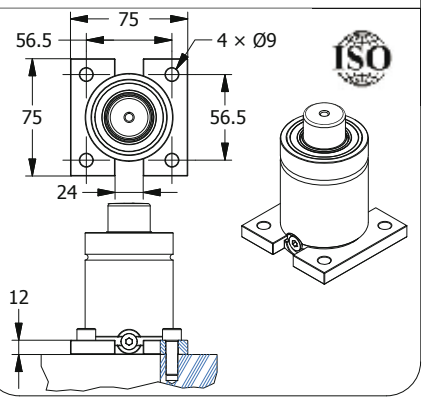


## SB0750 MOUNT

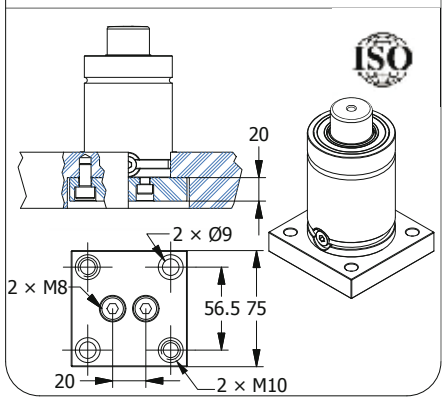


## ST0750 MOUNT

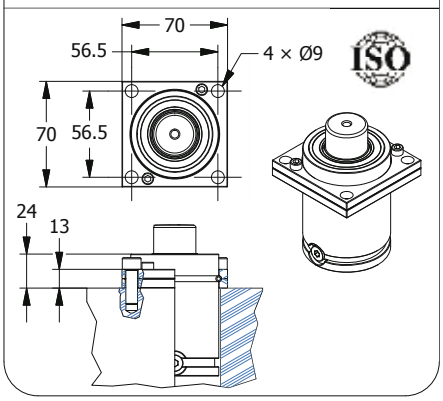


## SR0750 MOUNT

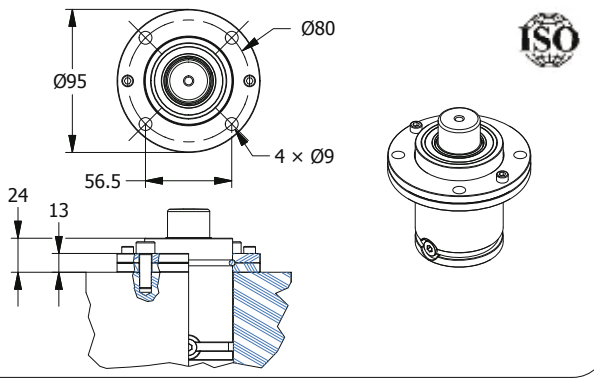


## SC0750 MOUNT

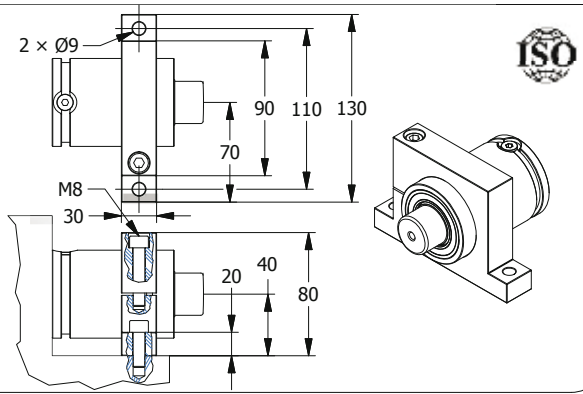


22/03/2011

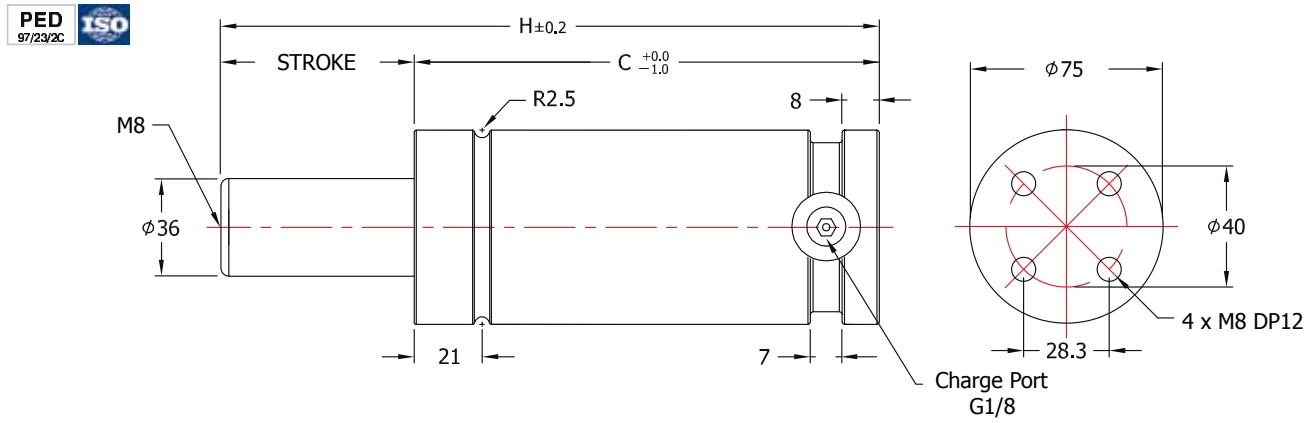


## HOW TO SPECIFY

| | | | | | | | | | |
|---|---|---|---|---|---|---|---|---|---|
| GAS SPRING | TSL1500 | × | 050 | S(F) | — | (MSA) | — | 150 | |
| | MODEL | | STROKE | SELF CONTAINED-S FITTING-SYSTEM-F | | MOUNT | | CHARGING PRESSURE (Bar) | |
| MOUNT | SP1500 | | | | | | | | |
| REPAIR KIT | RCL1500 | | | | | | | | |

[Caution!] Charging pressure has to be specified. Otherwise, 150Bar will be charged.

## TSL 1500

| Stroke (㎜) | Stroke (inch) | H | C | Force(N) (150 bar / +20℃) Initial | Force(N) (150 bar / +20℃) End force* | Gas vol. (㎤) | Weight (kg) | ISO |
|---|---|---|---|---|---|---|---|---|
| 10 | 0.39 | 130 | 120 | | 18,500 | 56.1 | 3.40 | |
| 13 | 0.51 | 135.4 | 122.4 | | 19,100 | 63.6 | 3.45 | |
| 15 | 0.59 | 140 | 125 | | 19,200 | 71.7 | 3.48 | |
| 20 | 0.79 | 150 | 130 | | 19,700 | 87.2 | 3.58 | |
| 25 | 0.98 | 160 | 135 | | 20,100 | 102.8 | 3.66 | √ |
| 30 | 1.18 | 170 | 140 | | 20,400 | 118.4 | 3.78 | |
| 35 | 1.38 | 180 | 145 | | 20,600 | 134.0 | 3.86 | |
| 38 | 1.50 | 186 | 148 | | 20,700 | 143.3 | 3.92 | |
| 40 | 1.57 | 190 | 150 | | 20,800 | 149.6 | 4.00 | |
| 45 | 1.77 | 200 | 155 | | 20,900 | 165.1 | 4.04 | |
| 50 | 1.97 | 210 | 160 | | 21,000 | 180.7 | 4.16 | √ |
| 60 | 2.36 | 230 | 170 | | 21,200 | 211.9 | 4.36 | |
| 63 | 2.48 | 237 | 174 | 15,150 | 21,100 | 224.3 | 4.40 | |
| 70 | 2.76 | 250 | 180 | | 21,400 | 243.0 | 4.47 | |
| 75 | 2.95 | 260 | 185 | | 21,400 | 258.6 | 4.60 | |
| 80 | 3.15 | 270 | 190 | | 21,500 | 274.2 | 4.67 | √ |
| 90 | 3.54 | 290 | 200 | | 21,600 | 305.3 | 4.85 | |
| 100 | 3.94 | 310 | 210 | | 21,600 | 336.5 | 5.03 | √ |
| 125 | 4.92 | 360 | 235 | | 21,800 | 414.4 | 5.47 | √ |
| 150 | 5.91 | 410 | 260 | | 21,900 | 492.3 | 5.92 | |
| 160 | 6.30 | 430 | 270 | | 21,900 | 523.4 | 6.22 | √ |
| 175 | 6.89 | 460 | 285 | | 22,000 | 570.2 | 6.37 | |
| 200 | 7.87 | 510 | 310 | | 22,000 | 648.1 | 6.82 | |
| 250 | 9.84 | 610 | 360 | | 22,100 | 803.8 | 7.90 | |
| 300 | 11.81 | 710 | 410 | | 22,100 | 959.6 | 8.68 | |

* = at full stroke

※ Special type is available upon requested.

### ■ CHARGING PRESSURE/FORCE INCREASE FACTOR

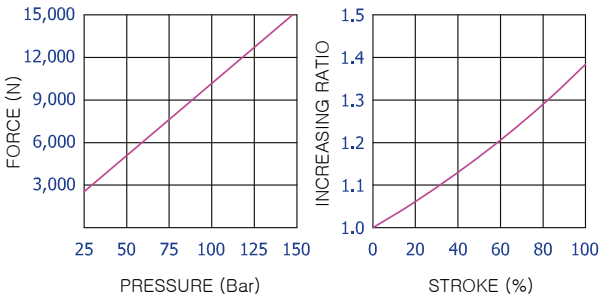


### ■ Calculation of charging pressure for TSL1500

$$\text{Charging pressure(Bar)} = \frac{\text{Initial Force(N)}}{101.7}$$

ex) What comes to the charging pressure of gas spring which demands force 12,000N?

$$118\text{(Bar)} = \frac{12{,}000\text{(N)}}{101.7}$$

22/03/2011

## MD MOUNT WELDED

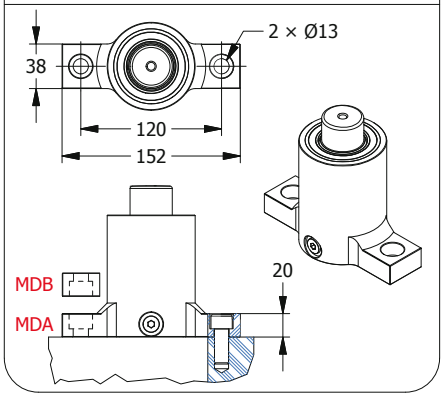


## MS MOUNT WELDED

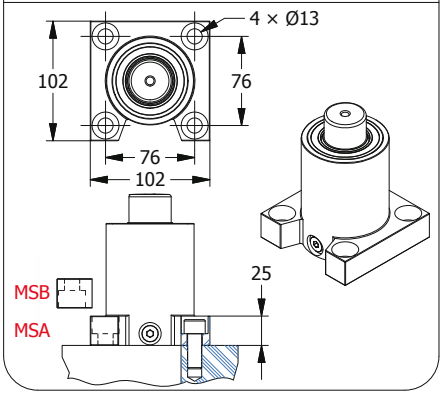


## MT MOUNT WELDED

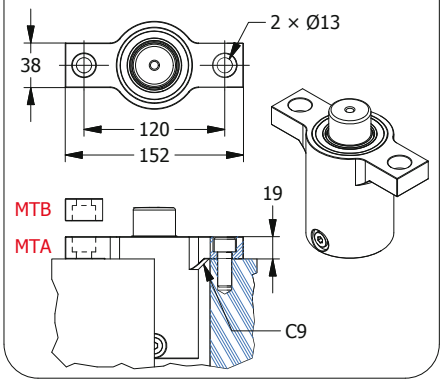


## MR MOUNT WELDED

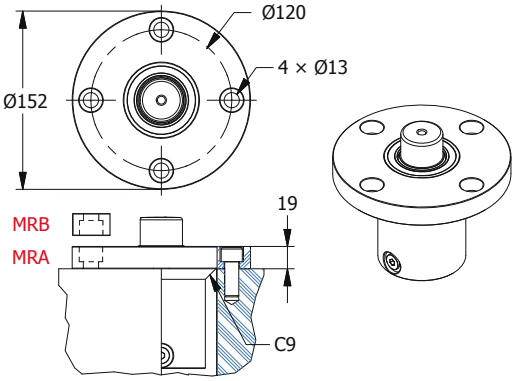


## MK MOUNT WELDED

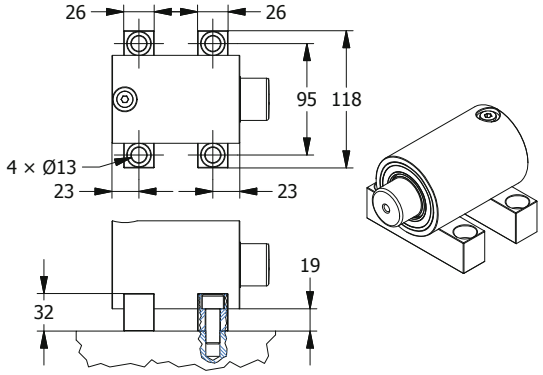


## SP1500 MOUNT

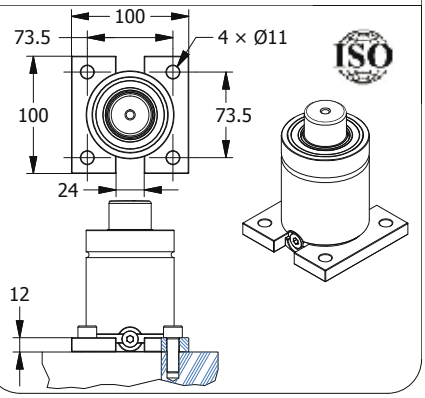


## SB1500 MOUNT

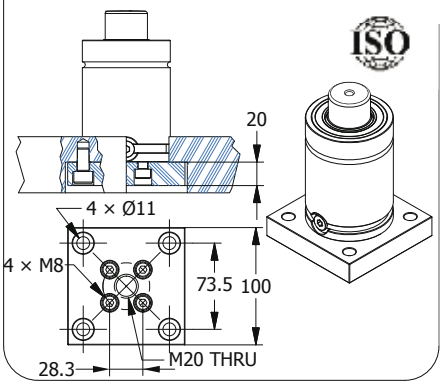


## ST1500 MOUNT

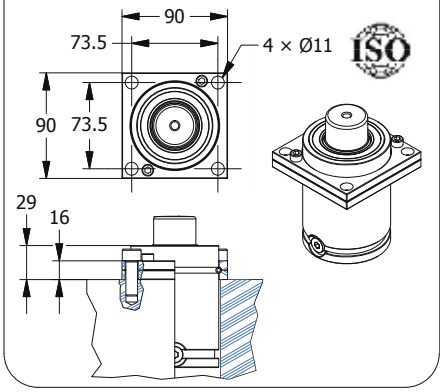


## SR1500 MOUNT

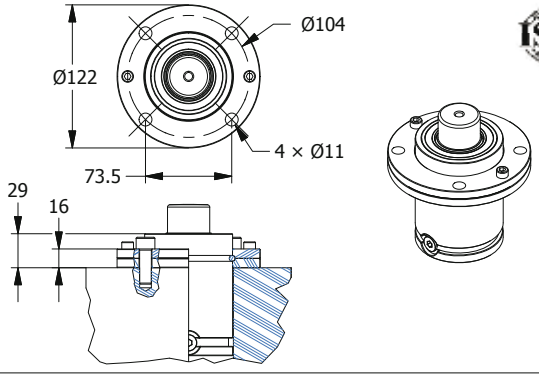


## SC1500 MOUNT

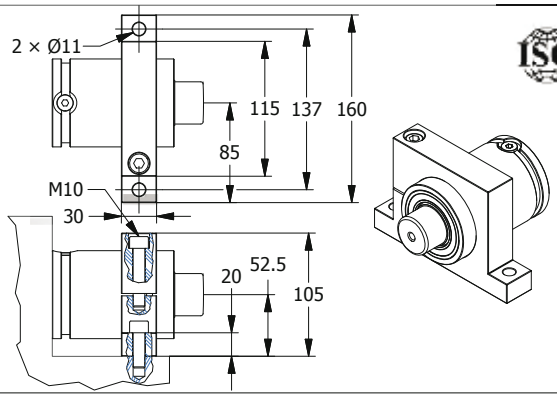


22/03/2011

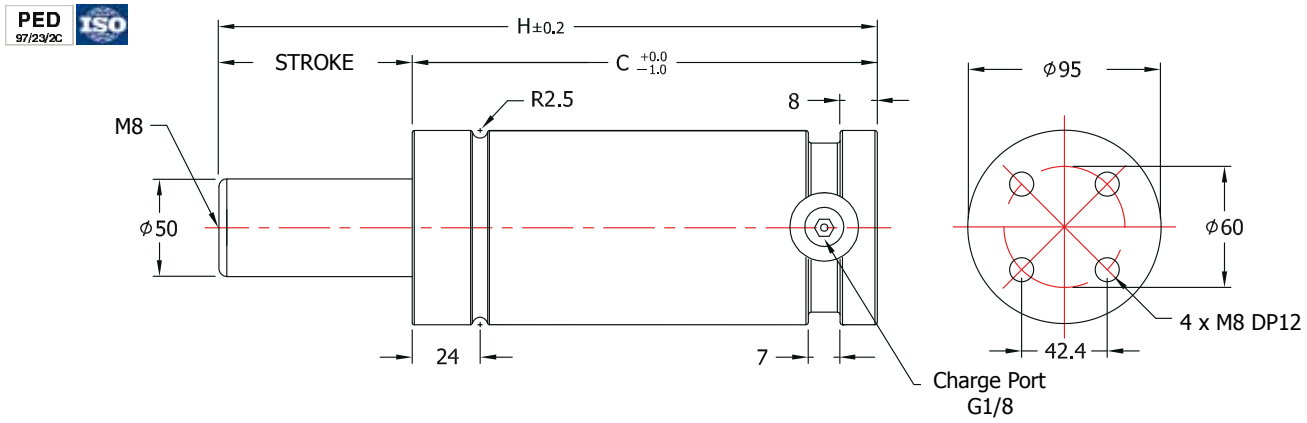


## HOW TO SPECIFY

| | | | | | | | | |
|---|---|---|---|---|---|---|---|---|
| GAS SPRING | TSL3000 | × | 050 | S(F) | — | (MSA) | — | 150 |
| | MODEL | | STROKE | SELF CONTAINED-S FITTING-SYSTEM-F | | MOUNT | | CHARGING PRESSURE (Bar) |
| MOUNT | SP3000 | | | | | | | |
| REPAIR KIT | RCL3000 | | | | | | | |

[Caution!] Charging pressure has to be specified. Otherwise, 150Bar will be charged.

## TSL 3000

| Stroke (㎜) | Stroke (inch) | H | C | Force(N) ( 150 bar / +20℃ ) Initial | Force(N) ( 150 bar / +20℃ ) End force* | Gas vol. (㎤) | Weight (kg) | ISO |
|---|---|---|---|---|---|---|---|---|
| 10 | 0.39 | 140 | 130 | | 37,000 | 95.5 | 5.74 | |
| 13 | 0.51 | 145.5 | 132.5 | | 38,500 | 108.0 | 5.84 | |
| 15 | 0.59 | 150 | 135 | | 38,900 | 120.6 | 5.92 | |
| 20 | 0.79 | 160 | 140 | | 40,200 | 145.7 | 6.09 | |
| 25 | 0.98 | 170 | 145 | | 41,200 | 170.8 | 6.48 | √ |
| 30 | 1.18 | 180 | 150 | | 42,000 | 195.9 | 6.55 | |
| 35 | 1.38 | 190 | 155 | | 42,600 | 221.1 | 6.62 | |
| 38 | 1.50 | 196 | 158 | | 42,900 | 236.1 | 6.73 | |
| 40 | 1.57 | 200 | 160 | | 43,100 | 246.2 | 6.80 | |
| 45 | 1.77 | 210 | 165 | | 43,600 | 271.3 | 6.98 | |
| 50 | 1.97 | 220 | 170 | | 43,900 | 296.4 | 7.15 | √ |
| 60 | 2.36 | 240 | 180 | | 44,500 | 346.7 | 7.51 | |
| 63 | 2.48 | 247 | 184 | 29,400 | 44,300 | 366.8 | 7.68 | |
| 70 | 2.76 | 260 | 190 | | 44,900 | 396.9 | 7.86 | |
| 75 | 2.95 | 270 | 195 | | 45,100 | 422.0 | 8.04 | |
| 80 | 3.15 | 280 | 200 | | 45,300 | 447.1 | 8.27 | √ |
| 90 | 3.54 | 300 | 210 | | 45,600 | 497.4 | 8.58 | |
| 100 | 3.94 | 320 | 220 | | 45,800 | 547.6 | 8.85 | √ |
| 125 | 4.92 | 370 | 245 | | 46,200 | 673.2 | 9.65 | √ |
| 150 | 5.91 | 420 | 270 | | 46,500 | 798.8 | 10.69 | |
| 160 | 6.30 | 440 | 280 | | 46,600 | 849.1 | 11.05 | √ |
| 175 | 6.89 | 470 | 295 | | 46,700 | 924.4 | 11.58 | |
| 200 | 7.87 | 520 | 320 | | 46,900 | 1050.0 | 12.46 | |
| 250 | 9.84 | 620 | 370 | | 47,200 | 1301.2 | 14.23 | |
| 300 | 11.81 | 720 | 420 | | 47,300 | 1552.4 | 16.00 | |

* = at full stroke

※ Special type is available upon requested.

### ■ CHARGING PRESSURE/FORCE INCREASE FACTOR

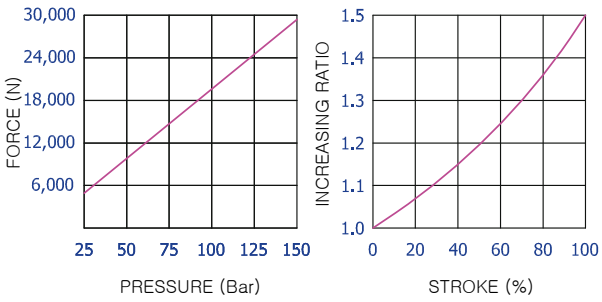


### ■ Calculation of charging pressure for TSL3000

$$\text{Charging pressure(Bar)} = \frac{\text{Initial Force(N)}}{196.2}$$

ex) What comes to the charging pressure of gas spring which demands force 25,000N?

$$127\text{(Bar)} = \frac{25{,}000\text{(N)}}{196.2}$$

22/03/2011

## MD MOUNT WELDED

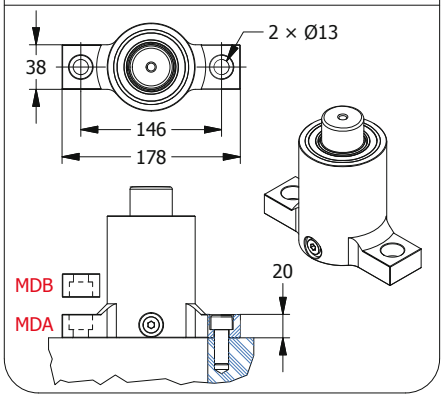


## MS MOUNT WELDED

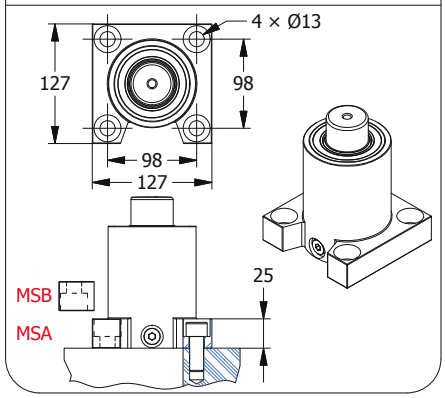


## MT MOUNT WELDED

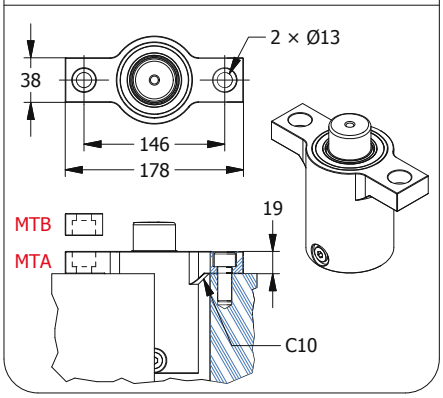


## MR MOUNT WELDED

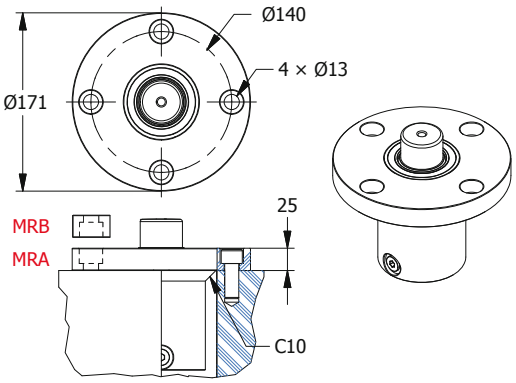


## MK MOUNT WELDED

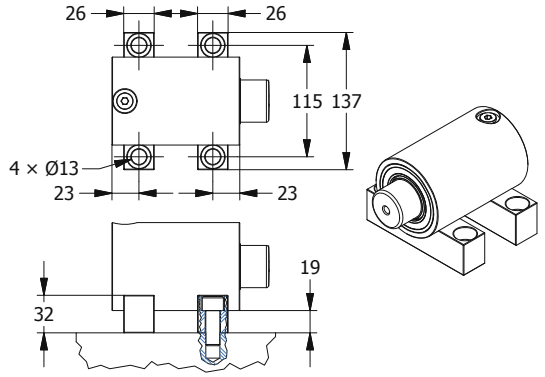


## SP3000 MOUNT

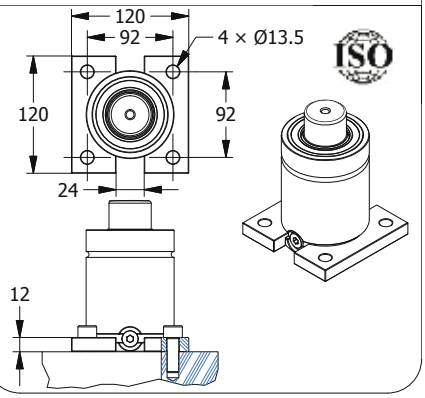


## SB3000 MOUNT

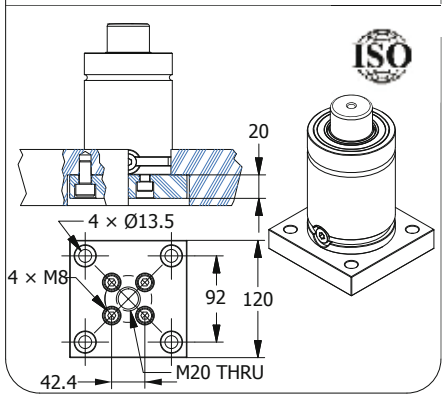


## ST3000 MOUNT

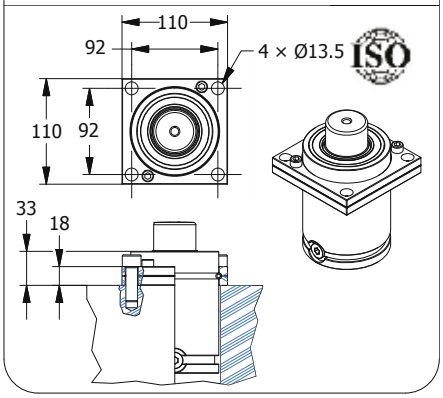


## SR3000 MOUNT

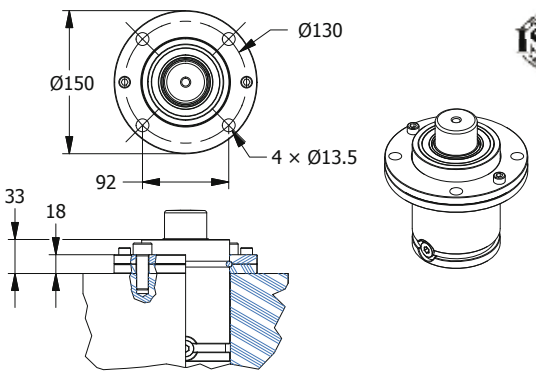


## SC3000 MOUNT

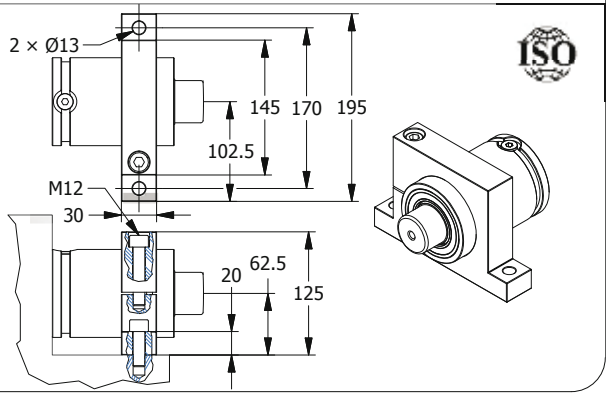


22/03/2011

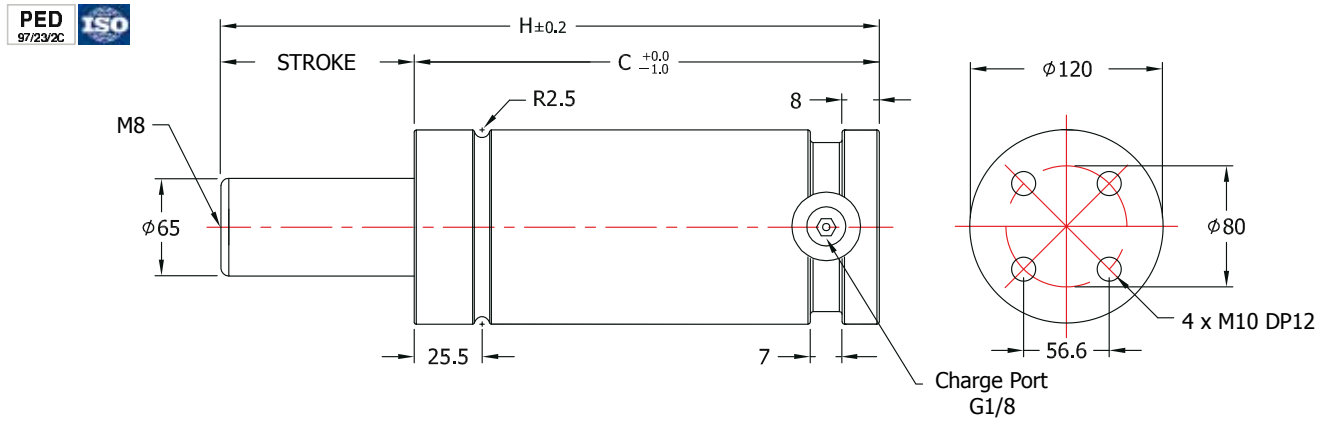


## HOW TO SPECIFY

| | | | | | | | | |
|---|---|---|---|---|---|---|---|---|
| GAS SPRING | TSL5000 | × | 050 | S(F) | — | (MSA) | — | 150 |
| | MODEL | | STROKE | SELF CONTAINED-S FITTING-SYSTEM-F | | MOUNT | | CHARGING PRESSURE (Bar) |
| MOUNT | SP5000 | | | | | | | |
| REPAIR KIT | RCL5000 | | | | | | | |

[Caution!] Charging pressure has to be specified. Otherwise, 150Bar will be charged.

## TSL 5000

| Stroke (㎜) | Stroke (inch) | H | C | Force(N) (150 bar / +20℃) Initial | Force(N) (150 bar / +20℃) End force* | Gas vol. (㎤) | Weight (kg) | ISO |
|---|---|---|---|---|---|---|---|---|
| 10 | 0.39 | 159.5 | 149.5 | | 63,300 | 153.1 | 10.32 | |
| 13 | 0.51 | 165.5 | 152.5 | | 65,600 | 176.6 | 10.71 | |
| 15 | 0.59 | 170 | 155 | | 66,500 | 196.3 | 11.10 | |
| 20 | 0.79 | 180 | 160 | | 69,100 | 235.5 | 11.49 | |
| 25 | 0.98 | 190 | 165 | | 71,000 | 274.8 | 11.88 | √ |
| 30 | 1.18 | 200 | 170 | | 72,600 | 314.0 | 12.27 | |
| 35 | 1.38 | 210 | 175 | | 73,900 | 353.3 | 12.66 | |
| 38 | 1.50 | 216 | 178 | | 74,500 | 376.8 | 13.00 | |
| 40 | 1.57 | 220 | 180 | | 74,900 | 392.5 | 13.44 | |
| 45 | 1.77 | 230 | 185 | | 75,800 | 431.8 | 13.83 | |
| 50 | 1.97 | 240 | 190 | | 76,500 | 471.0 | 14.22 | √ |
| 60 | 2.36 | 260 | 200 | | 77,800 | 549.5 | 14.68 | |
| 63 | 2.48 | 266 | 203 | 49,650 | 78,100 | 573.1 | 15.07 | |
| 70 | 2.76 | 280 | 210 | | 78,700 | 628.0 | 15.46 | |
| 75 | 2.95 | 290 | 215 | | 79,100 | 667.3 | 15.85 | |
| 80 | 3.15 | 300 | 220 | | 79,400 | 706.5 | 16.24 | √ |
| 90 | 3.54 | 320 | 230 | | 80,000 | 785.0 | 16.94 | |
| 100 | 3.94 | 340 | 240 | | 80,500 | 863.5 | 17.66 | √ |
| 125 | 4.92 | 390 | 265 | | 81,400 | 1059.8 | 18.05 | √ |
| 150 | 5.91 | 440 | 290 | | 82,100 | 1256.0 | 18.44 | |
| 160 | 6.30 | 460 | 300 | | 82,300 | 1334.5 | 18.83 | √ |
| 175 | 6.89 | 490 | 315 | | 82,600 | 1452.3 | 19.22 | |
| 200 | 7.87 | 540 | 340 | | 83,000 | 1648.5 | 19.61 | |
| 250 | 9.84 | 640 | 390 | | 83,500 | 2041.0 | 20.31 | |
| 300 | 11.81 | 740 | 440 | | 83,900 | 2433.5 | 21.01 | |

* = at full stroke

※ Special type is available upon requested.

### ■ CHARGING PRESSURE/FORCE INCREASE FACTOR

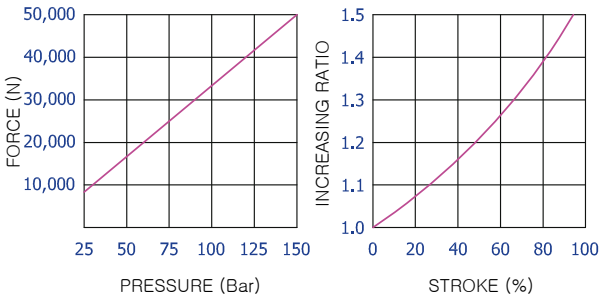


### ■ Calculation of charging pressure for TSL5000

$$\text{Charging pressure(Bar)} = \frac{\text{Initial Force(N)}}{331.7}$$

ex) What comes to the charging pressure of gas spring which demands force 38,000N?

$$115\text{(Bar)} = \frac{38{,}000\text{(N)}}{331.7}$$

22/03/2011

## MD MOUNT WELDED

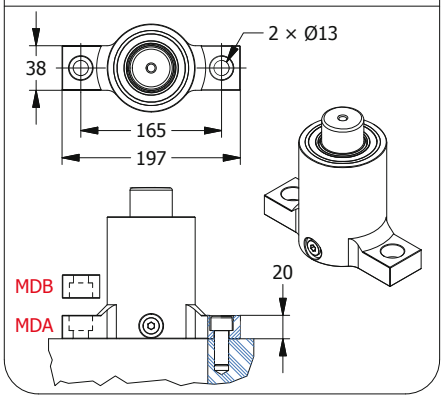


## MS MOUNT WELDED

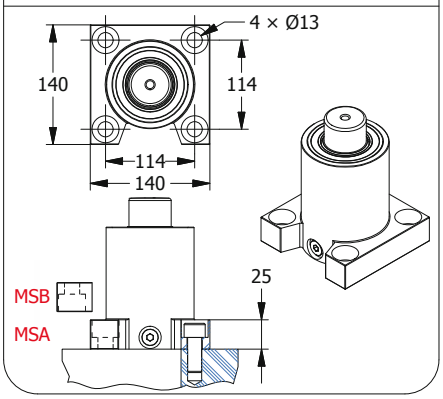


## MT MOUNT WELDED

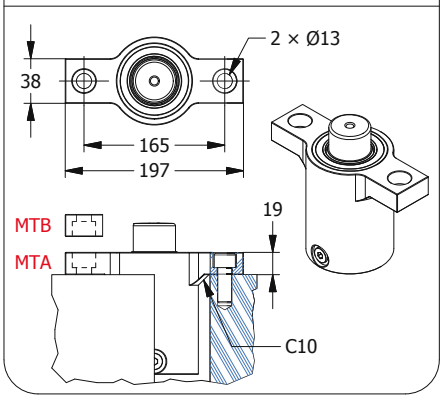


## MR MOUNT WELDED

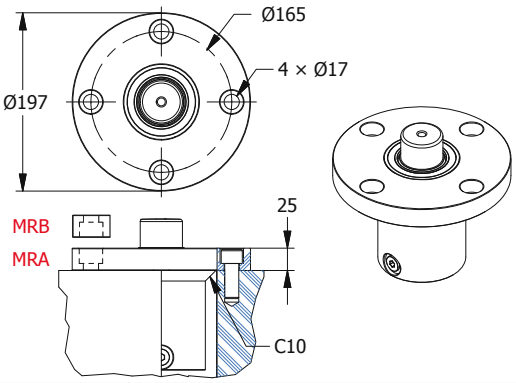


## MK MOUNT WELDED

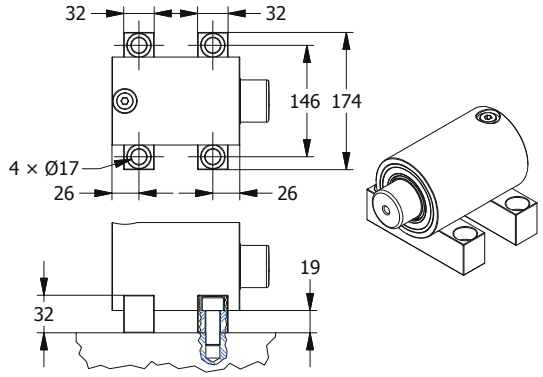


## SP5000 MOUNT

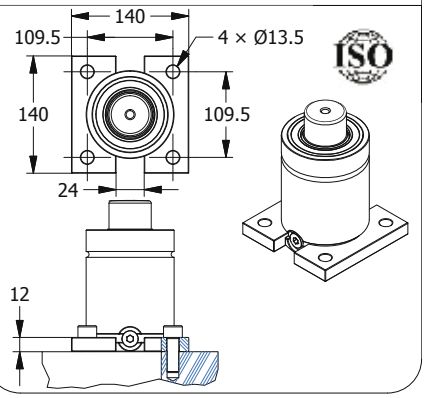


## SB5000 MOUNT

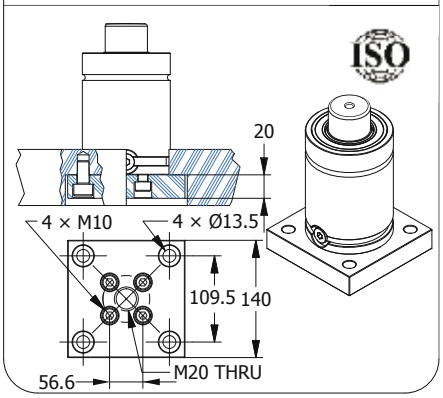


## ST5000 MOUNT

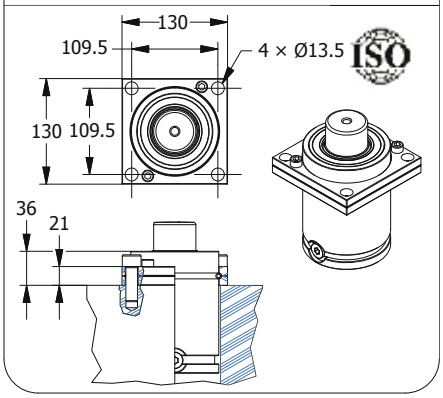


## SR5000 MOUNT

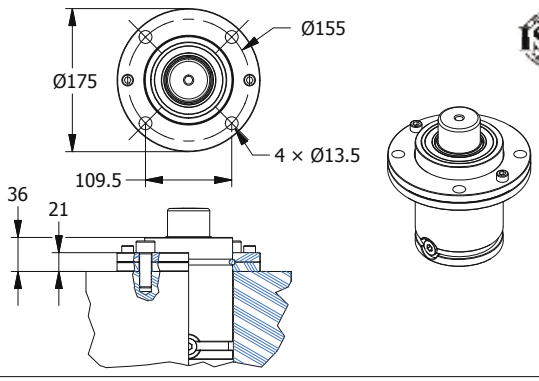


## SC5000 MOUNT

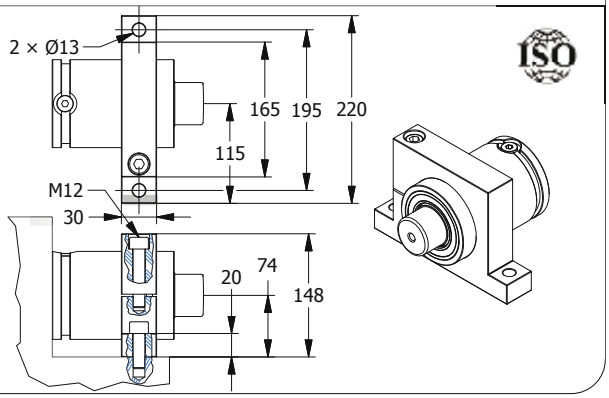


22/03/2011

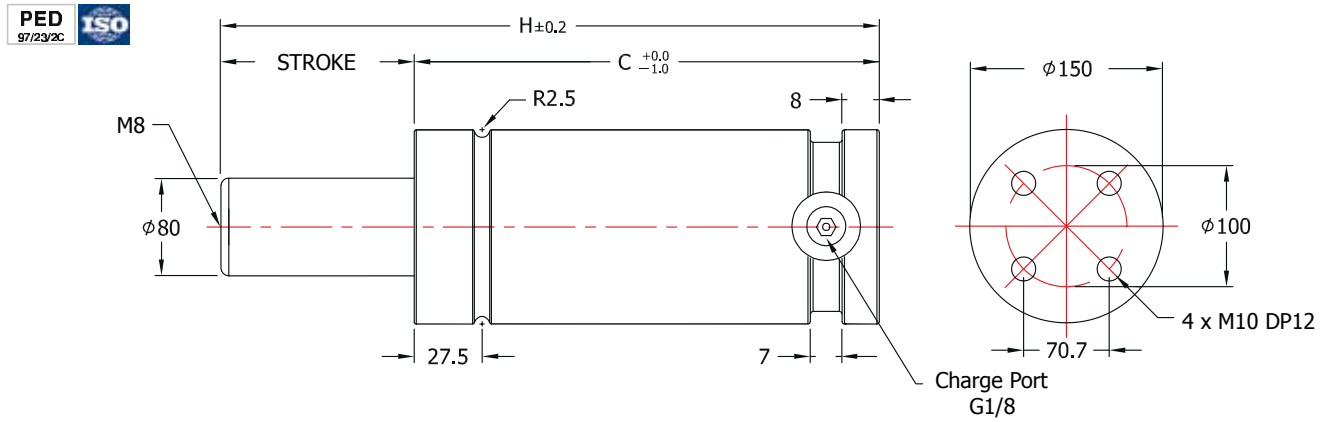


## HOW TO SPECIFY

GAS SPRING — TSL7500 (MODEL) × 050 (STROKE) S(F) (SELF CONTAINED-S FITTING-SYSTEM-F) — (MSA) (MOUNT) — 150 (CHARGING PRESSURE (Bar))

MOUNT — SP7500

REPAIR KIT — RCL7500

[Caution!] Charging pressure has to be specified. Otherwise, 150Bar will be charged.

## TSL 7500

| Stroke (㎜) | Stroke (inch) | H | C | Force(N) ( 150 bar / +20℃ ) Initial | Force(N) ( 150 bar / +20℃ ) End force* | Gas vol. (㎤) | Weight (kg) | ISO |
|---|---|---|---|---|---|---|---|---|
| 15 | 0.59 | 185 | 170 | | 96,400 | 343.4 | 16.80 | |
| 20 | 0.79 | 195 | 175 | | 100,100 | 404.8 | 18.40 | |
| 25 | 0.98 | 205 | 180 | | 103,000 | 466.1 | 21.20 | √ |
| 30 | 1.18 | 215 | 185 | | 105,400 | 527.4 | 22.45 | |
| 35 | 1.38 | 225 | 190 | | 107,300 | 588.8 | 23.20 | |
| 38 | 1.50 | 231 | 193 | | 108,300 | 625.5 | 24.20 | |
| 40 | 1.57 | 235 | 195 | | 109,000 | 650.1 | 25.20 | |
| 45 | 1.77 | 245 | 200 | | 110,300 | 711.4 | 26.90 | |
| 50 | 1.97 | 255 | 205 | | 111,500 | 772.7 | 27.90 | √ |
| 60 | 2.36 | 275 | 215 | | 113,500 | 895.4 | 29.50 | |
| 63 | 2.48 | 282 | 219 | | 113,200 | 944.5 | 30.50 | |
| 70 | 2.76 | 295 | 225 | 75,300 | 115,000 | 1018.0 | 31.80 | |
| 75 | 2.95 | 305 | 230 | | 115,600 | 1079.4 | 33.20 | |
| 80 | 3.15 | 315 | 235 | | 116,200 | 1140.7 | 34.40 | √ |
| 90 | 3.54 | 335 | 245 | | 117,200 | 1263.4 | 35.40 | |
| 100 | 3.94 | 355 | 255 | | 118,100 | 1386.0 | 36.50 | √ |
| 125 | 4.92 | 405 | 280 | | 119,700 | 1692.7 | 37.40 | √ |
| 150 | 5.91 | 455 | 305 | | 120,800 | 1999.3 | 38.50 | |
| 160 | 6.30 | 475 | 315 | | 121,200 | 2122.0 | 39.40 | √ |
| 175 | 6.89 | 505 | 330 | | 121,600 | 2305.9 | 40.40 | |
| 200 | 7.87 | 555 | 355 | | 122,300 | 2612.6 | 41.70 | |
| 250 | 9.84 | 655 | 405 | | 123,200 | 3225.9 | 42.60 | |
| 300 | 11.81 | 755 | 455 | | 123,900 | 3839.1 | 43.70 | |

* = at full stroke

※ Special type is available upon requested.

### ■ CHARGING PRESSURE/FORCE INCREASE FACTOR

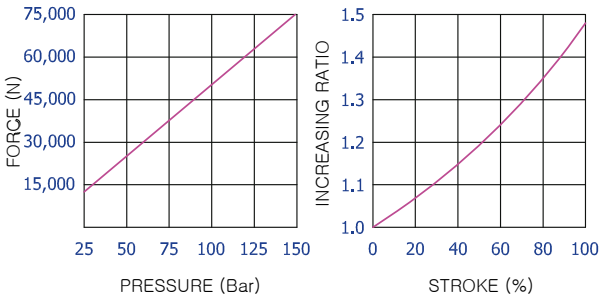


### ■ Calculation of charging pressure for TSL7500

$$\text{Charging pressure(Bar)} = \frac{\text{Initial Force(N)}}{502.4}$$

ex) What comes to the charging pressure of gas spring which demands force 65,000N?

$$129(\text{Bar}) = \frac{65{,}000(\text{N})}{502.4}$$

22/03/2011

## MS MOUNT

WELDED

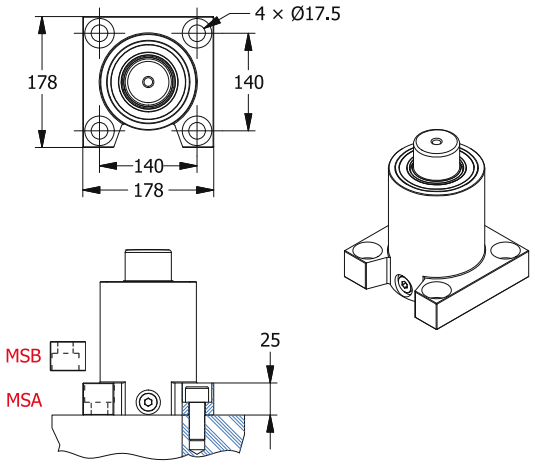


## SB7500 MOUNT

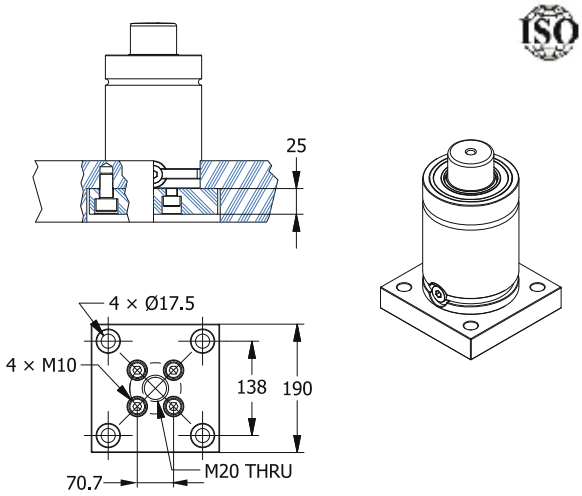


## SR7500 MOUNT

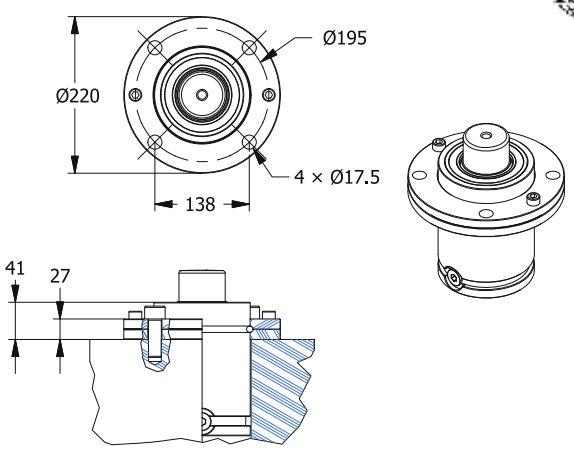


## ST7500 MOUNT

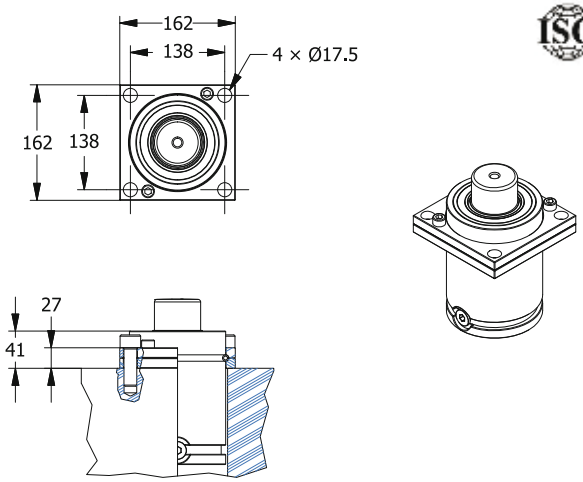


## SP7500 MOUNT

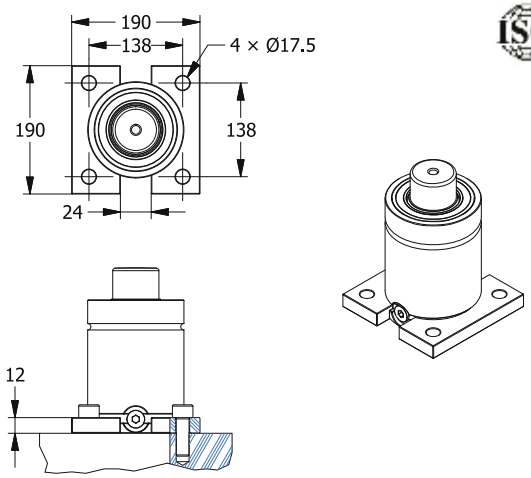


## SC7500 MOUNT

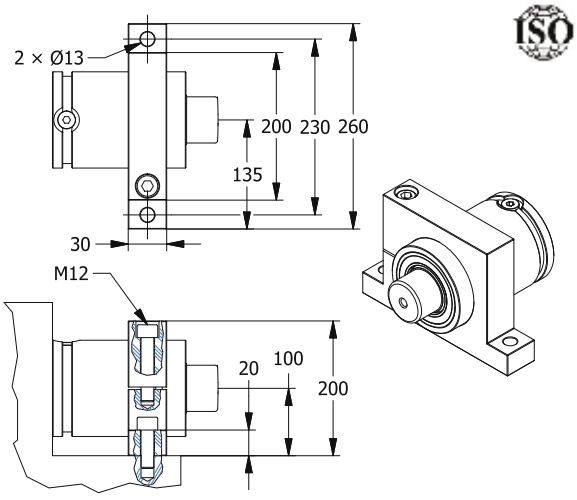


22/03/2011

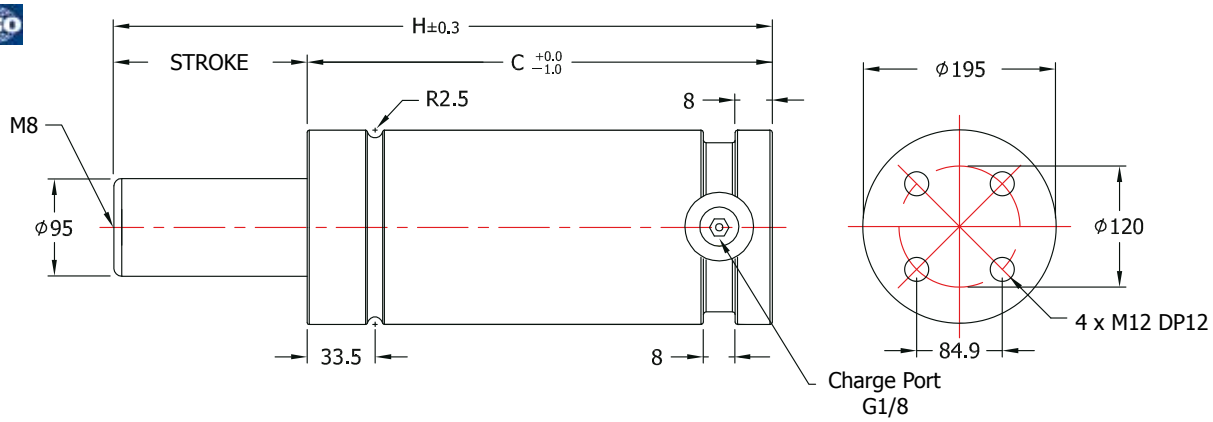


## HOW TO SPECIFY

| | | | | | | | | | |
|---|---|---|---|---|---|---|---|---|---|
| GAS SPRING | TSL10000 | × | 050 | S(F) | — | (MSA) | — | 150 | |
| | MODEL | | STROKE | SELF CONTAINED-S FITTING-SYSTEM-F | | MOUNT | | CHARGING PRESSURE (Bar) | |
| MOUNT | SP10000 | | | | | | | | |
| REPAIR KIT | RCL10000 | | | | | | | | |

[Caution!] Charging pressure has to be specified. Otherwise, 150Bar will be charged.

## TSL 10000

| Stroke (㎜) | Stroke (inch) | H | C | Force(N) (150 bar / +20℃) Initial | Force(N) (150 bar / +20℃) End force* | Gas vol. (㎤) | Weight (kg) | ISO |
|---|---|---|---|---|---|---|---|---|
| 20 | 0.79 | 200 | 180 | 106,200 | 137,600 | 619.8 | 36.20 | |
| 25 | 0.98 | 210 | 185 | | 140,400 | 726.6 | 38.50 | |
| 30 | 1.18 | 220 | 190 | | 142,500 | 833.5 | 40.20 | |
| 35 | 1.38 | 230 | 195 | | 144,200 | 940.4 | 42.50 | |
| 38 | 1.50 | 236 | 198 | | 145,100 | 1004.5 | 44.10 | |
| 40 | 1.57 | 240 | 200 | | 145,600 | 1047.2 | 45.60 | |
| 45 | 1.77 | 250 | 205 | | 146,700 | 1154.1 | 47.90 | |
| 50 | 1.97 | 260 | 210 | | 147,700 | 1260.9 | 48.80 | √ |
| 60 | 2.36 | 280 | 220 | | 149,200 | 1474.6 | 50.90 | |
| 63 | 2.48 | 287 | 223 | | 149,600 | 1538.8 | 51.70 | |
| 70 | 2.76 | 300 | 230 | | 150,300 | 1688.4 | 53.20 | |
| 75 | 2.95 | 310 | 235 | | 150,800 | 1795.2 | 55.45 | |
| 80 | 3.15 | 320 | 240 | | 151,200 | 1902.1 | 57.00 | √ |
| 90 | 3.54 | 340 | 250 | | 152,000 | 2115.8 | 59.50 | |
| 100 | 3.94 | 360 | 260 | | 152,600 | 2329.5 | 61.80 | √ |
| 125 | 4.92 | 410 | 285 | | 153,700 | 2863.8 | 64.50 | √ |
| 150 | 5.91 | 460 | 310 | | 154,500 | 3398.1 | 67.20 | |
| 160 | 6.30 | 480 | 320 | | 154,700 | 3611.8 | 69.00 | √ |
| 175 | 6.89 | 510 | 335 | | 155,100 | 3932.4 | 72.30 | |
| 200 | 7.87 | 560 | 360 | | 155,500 | 4466.7 | 74.50 | √ |
| 250 | 9.84 | 660 | 410 | | 156,100 | 5535.3 | 80.50 | √ |
| 300 | 11.81 | 760 | 460 | | 156,600 | 6603.8 | 86.50 | √ |

* = at full stroke

※ Special type is available upon requested.

### ■ CHARGING PRESSURE/FORCE INCREASE FACTOR

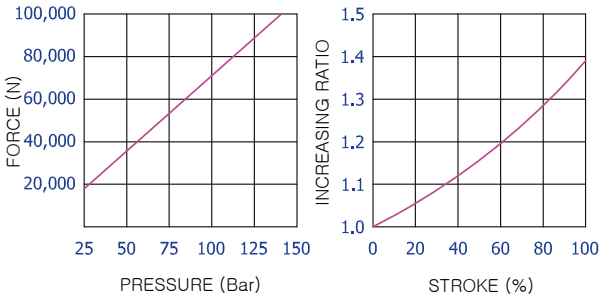


### ■ Calculation of charging pressure for TSL10000

$$\text{Charging pressure(Bar)} = \frac{\text{Initial Force(N)}}{708.5}$$

ex) What comes to the charging pressure of gas spring which demands force 85,000N?

$$120\text{(Bar)} = \frac{85{,}000\text{(N)}}{708.5}$$

22/03/2011

## MS MOUNT WELDED

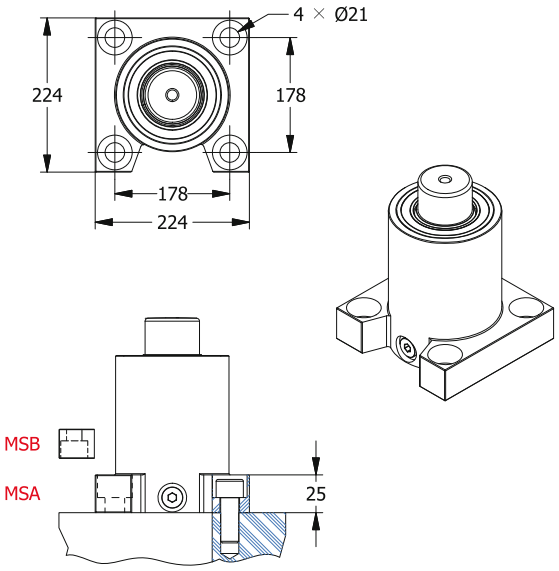


## SB10000 MOUNT

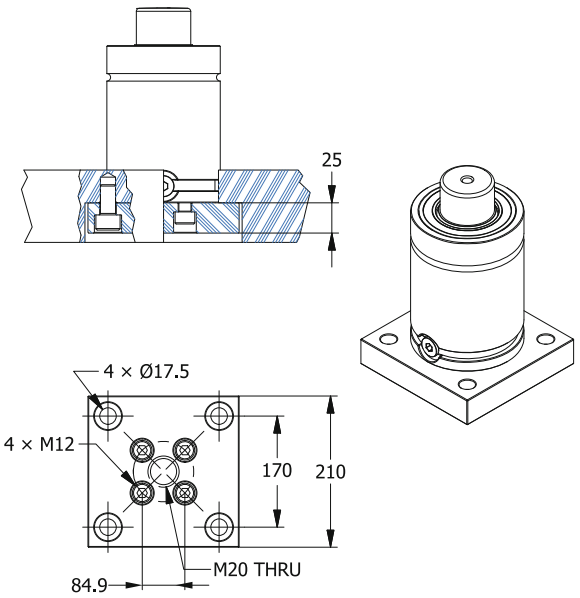


## SP10000 MOUNT

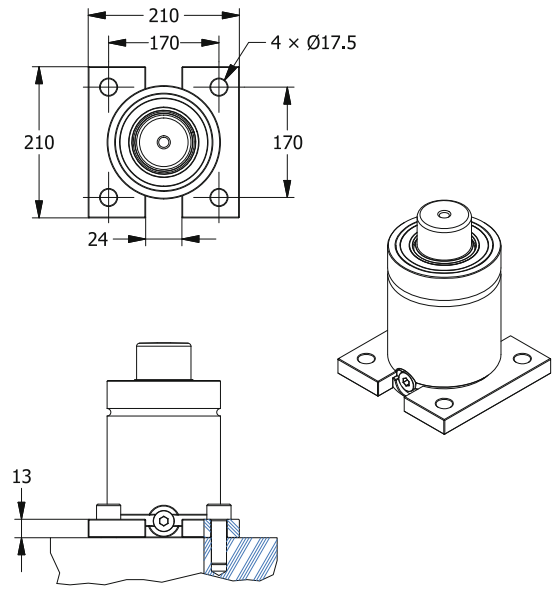


## ST10000 MOUNT

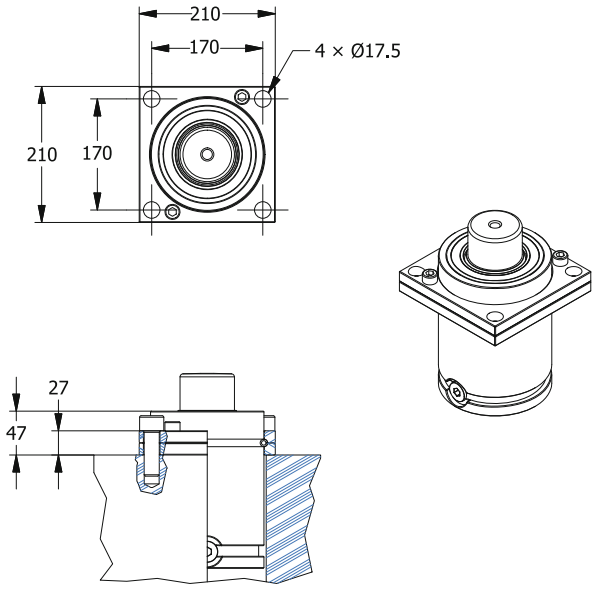


22/03/2011

# PAN3

PAN3 is used to check charging pressure, to charge gas and to discharge gas spring.

It has 3 connection ports for fitting type gas spring. Gas should be charged through the charging plug. Gas spring is discharged when you open the valve to exhaust gas.

Never charge with any other than Nitrogen ($N_2$).

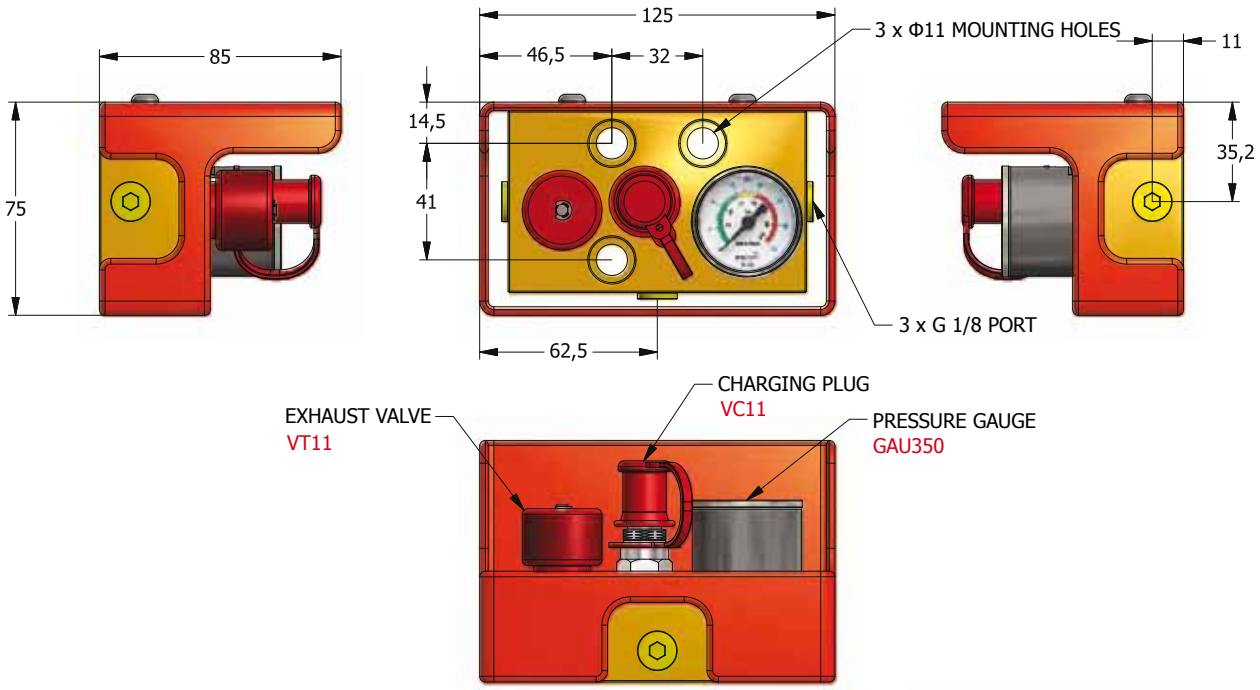


## PAN3 USE EXAMPLE

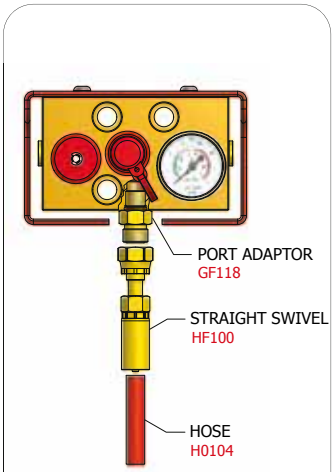


PAN3 + FITTING CONNECTION

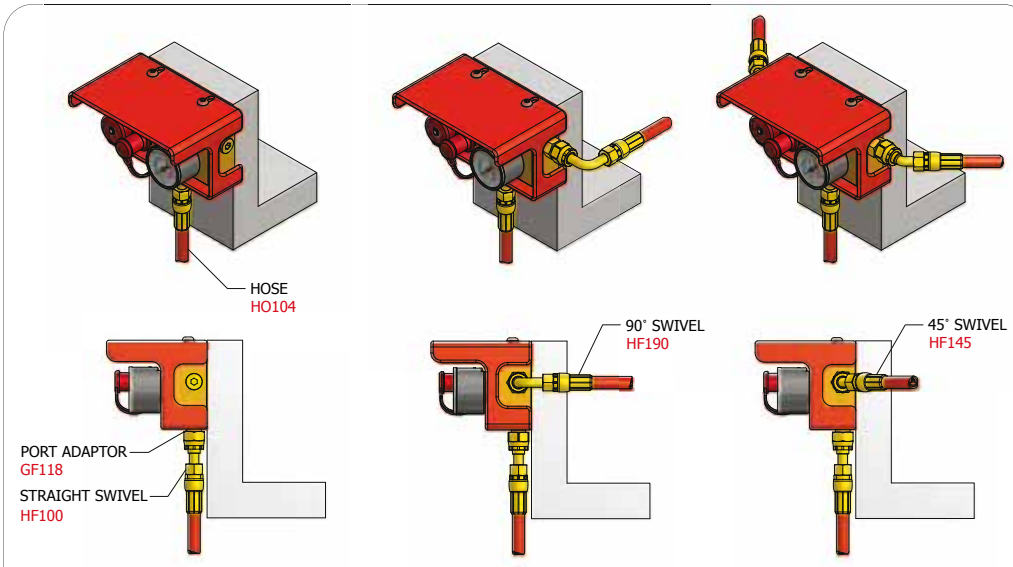


1 PORT USE

2 PORT USE

3 PORT USE

22/03/2011

# PAN6

PAN6 is CONTROL PANEL for COMPACT FITTING.

It is used to check charging pressure, to charge and to discharge gas spring.

Never charge with any other than Nitrogen (N2).

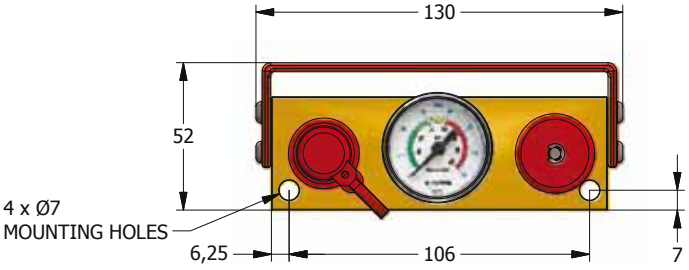


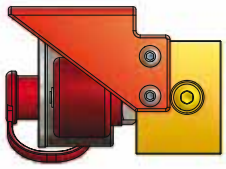

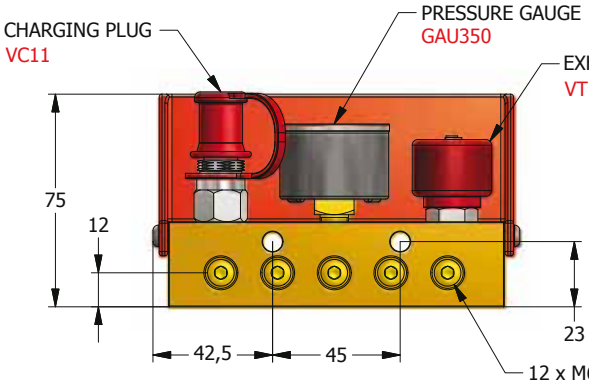


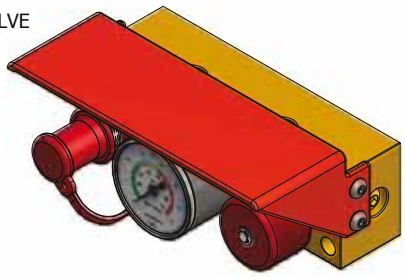

## PAN6 USE EXAMPLE

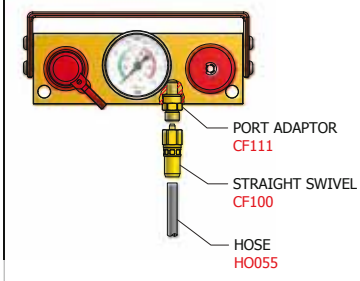


PAN6 + FITTING CONNECTION

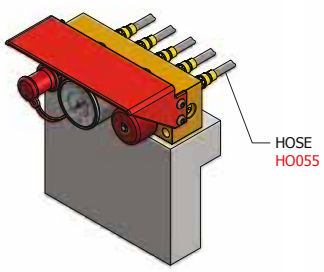


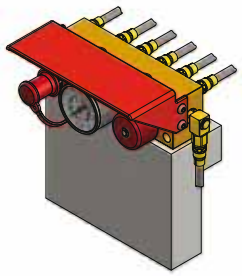

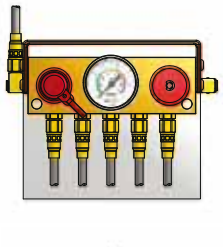

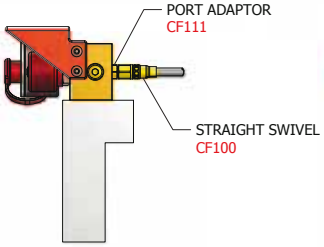


VERTICALITY FIX 5 PORT USE

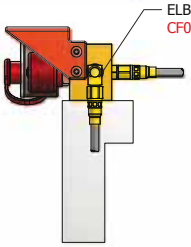


VERTICALITY FIX 7 PORT USE

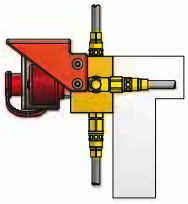

HORIZONTALITY FIX 7 PORT USE

22/03/2011

# PSS SERIES

PSS MULTI PANEL is used when single mold needs multiple pressures.

Depends on model, it can be used from 2 lines to 8 lines of different pressure as a customer needs.

PSS-2
PSS-3
PSS-4
PSS-5
PSS-6
PSS-7
PSS-8

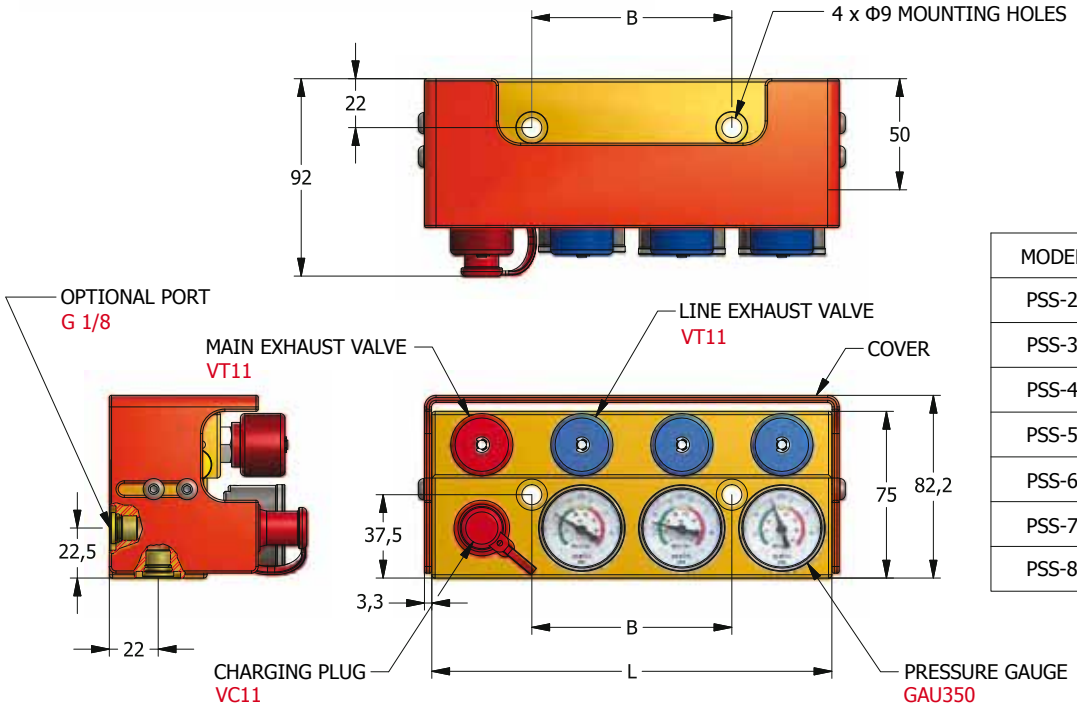


| MODEL | L | B |
|---|---|---|
| PSS-2 | 135 | 45 |
| PSS-3 | 180 | 90 |
| PSS-4 | 225 | 135 |
| PSS-5 | 270 | 180 |
| PSS-6 | 315 | 225 |
| PSS-7 | 360 | 270 |
| PSS-8 | 405 | 315 |

## HOW TO SPECIFY

HOW TO SPECIFY

PSS - 3

PSS: MULTI PANEL

3: Line

## PSS USE EXAMPLE

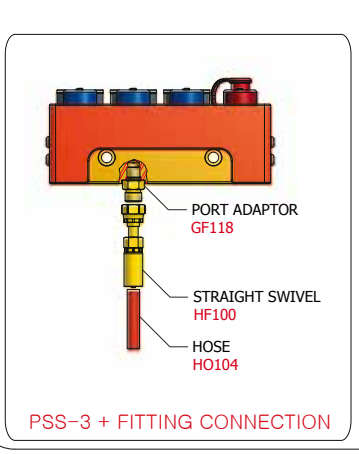


PSS-3 + FITTING CONNECTION

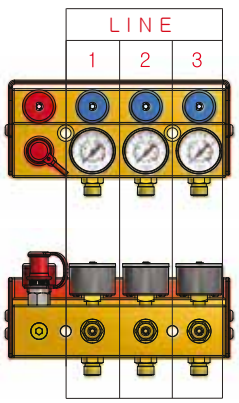


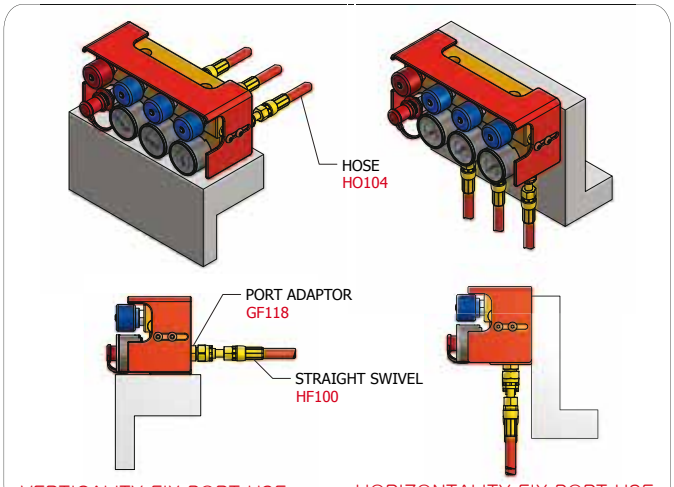


VERTICALITY FIX PORT USE

HORIZONTALITY FIX PORT USE

22/03/2011

# DISTRIBUTION BLOCK

Distribution Block is able to be easily used for a connection of different shaped and built gas springs.

All distribution block is able to be customized by user's needs.

## HB-10

### Distribution 10 Port Block

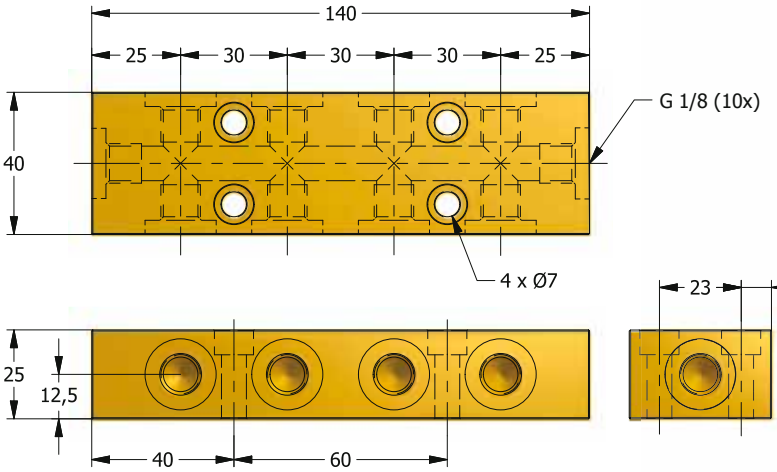


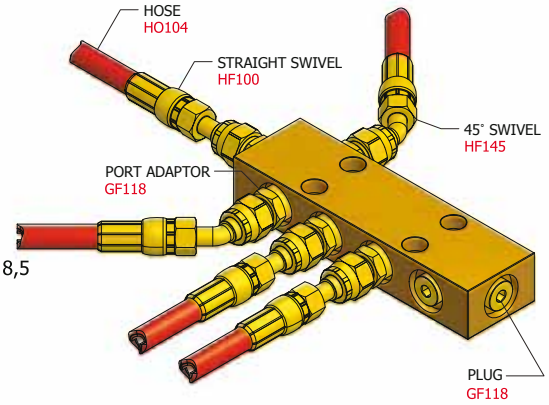


HB-10 USE EXAMPLE

## CB-4

### Compact 4 Block

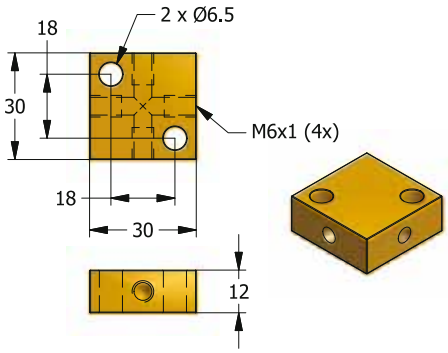


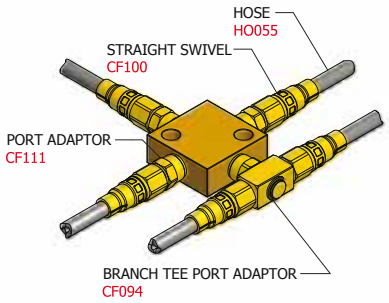


CB-4 USE EXAMPLE

## CB-12

### Compact 12 Block

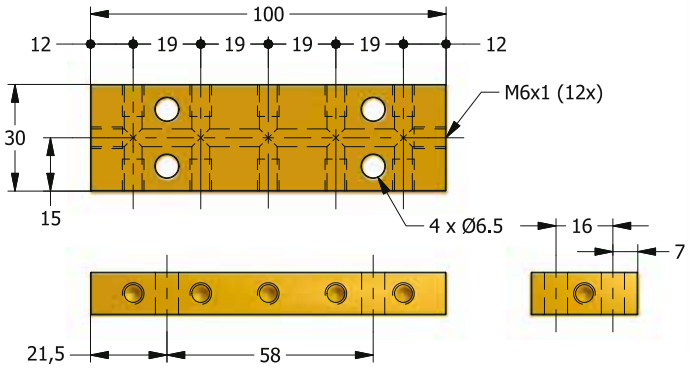


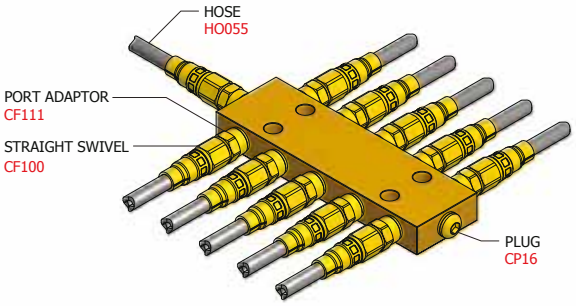


CB-12 USE EXAMPLE

22/03/2011

HOSE HO055

# COMPACT FITTING

COMPACT FITTING is the smallest size to make fitting system with HOSE HO055 in small area. Also, it is able to apply in variety situations with GF fitting.

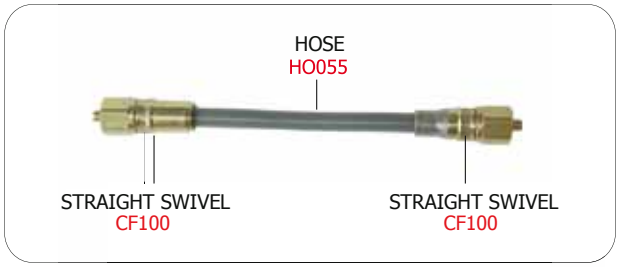


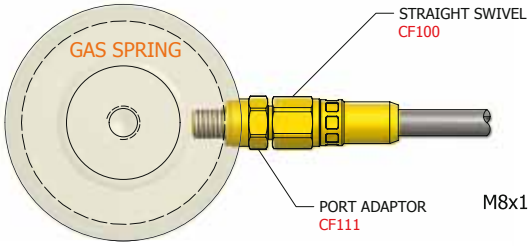


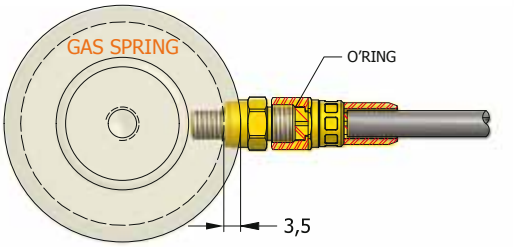


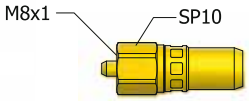


STRAIGHT SWIVEL
CF100

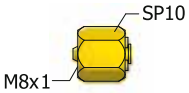


END PLUG
CP18

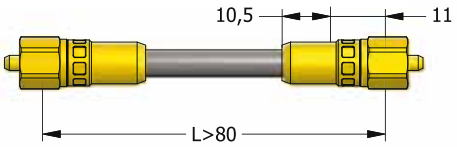


minimum working length
(compression preparation)

completion

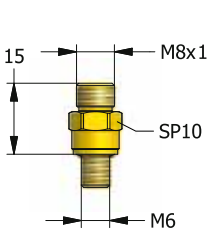


PORT ADAPTOR
CF111

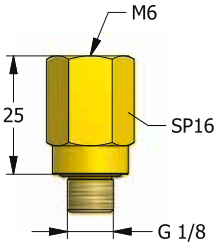


G 1/8 PORT ADAPTOR
CF118

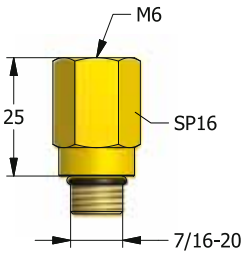


7/16 PORT ADAPTOR
CF716

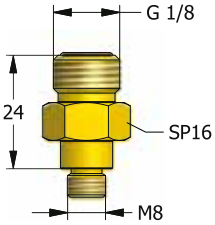


G 1/8 - M8 UNION
CF188

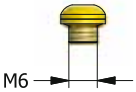


PLUG
CP16

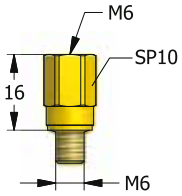


PORT ADAPTOR EXTENSION
CF110

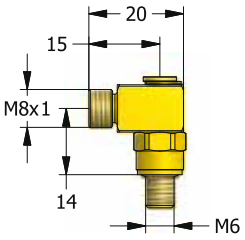


ELBOW PORT ADAPTOR
CF090

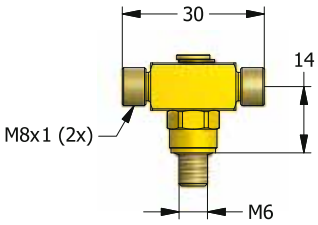


BRANCH TEE PORT ADAPTOR
CF094

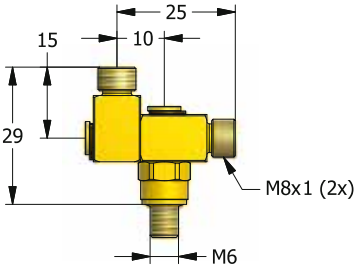


RUN TEE PORT ADAPTOR
CF093

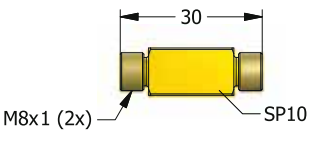


UNION
CTH10

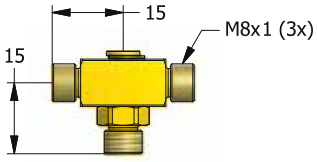


UNION TEE
CTH93

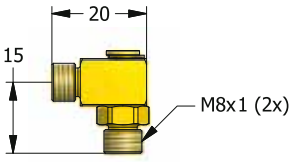


UNION ELBOW
CTH90

22/03/2011

## HOSE HO104

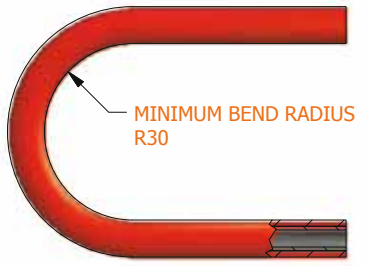


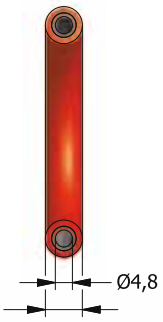


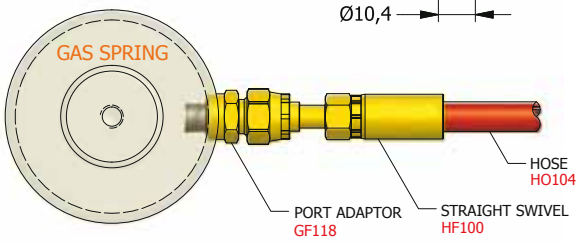


FITTING + HOSE USE EXAMPLE

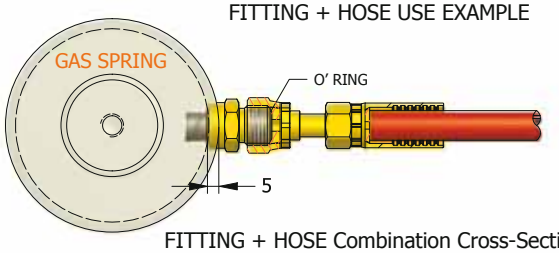


FITTING + HOSE Combination Cross-Section View

# GF FITTING

GF FITTING is the most common fitting system by using HOSE HO104. It can be installed in fitting system by variety combinations.

WORKING PRESSURE 200bar
BURST PRESSURE 700bar

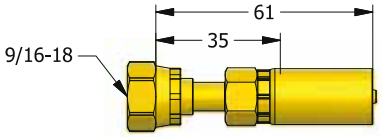


STRAIGHT SWIVEL
HF100

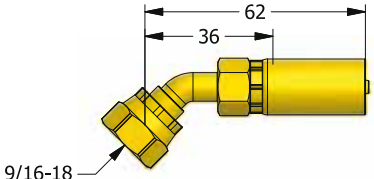


45° SWIVEL
HF145

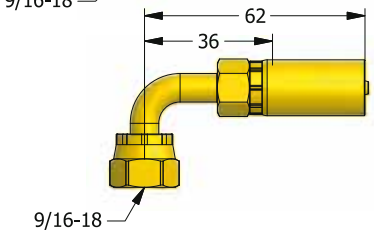


90° SWIVEL
HF190

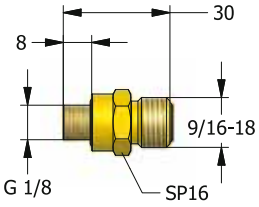


PORT ADAPTOR
GF118

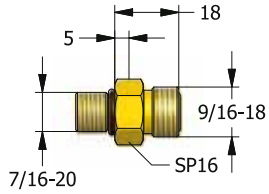


PORT ADAPTOR
GF111

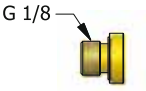


PLUG
GP118

PLUG
GP716

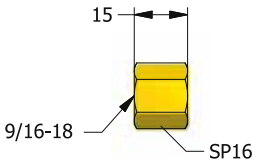


END PLUG
GP100

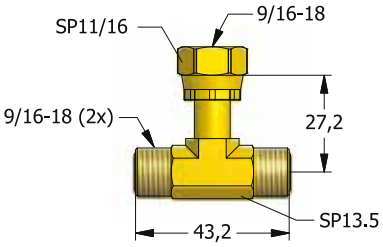


SWIVEL NUT BRANCH TEE
FS094

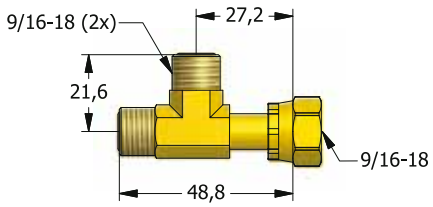


SWIVEL NUT RUN TEE
FS093

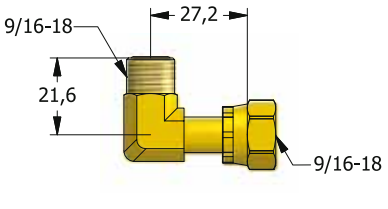


90° SWIVEL NUT ELBOW
FS090

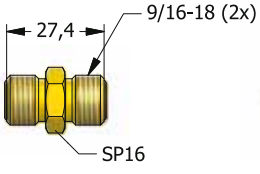


UNION
HTH10

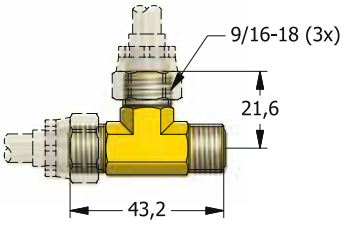


UNION TEE
HTH93

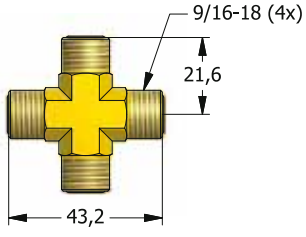


UNION CROSS
HTH94

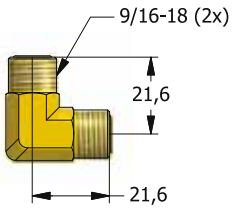


UNION ELBOW
HTH90

22/03/2011

# VF FITTING

VF FITTING with HOSE HO104 is fitting system that uses a connection of surface contact without sealing. It can be installed in fitting system by combinations.

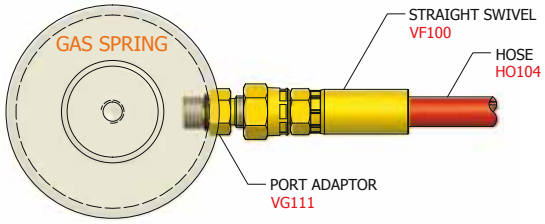


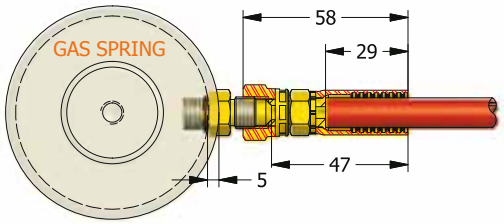


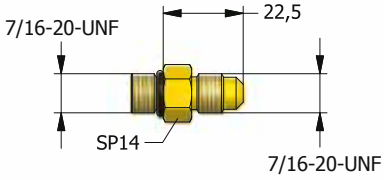


PORT ADAPTOR
VG111

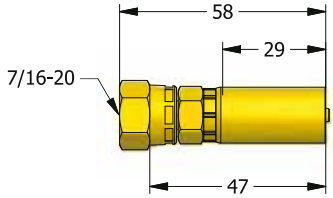


STRAIGHT SWIVEL
VF100

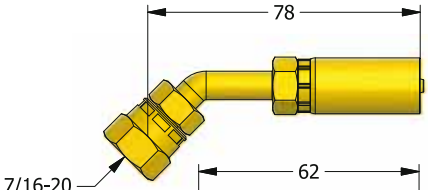


45° SWIVEL
VF145

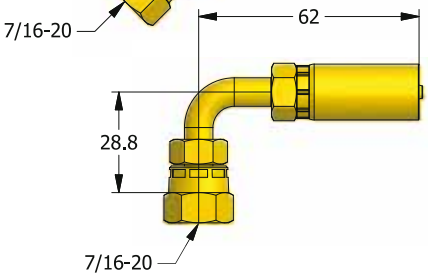


90° SWIVEL
VF190

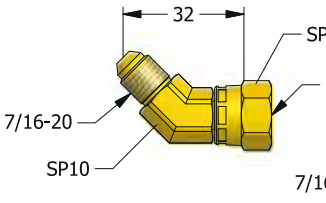


45° SWIVEL NUT ELBOW
VS045

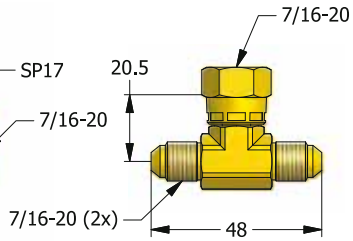


SWIVEL NUT BRANCH TEE
VS094

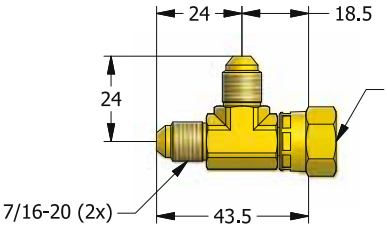


SWIVEL NUT RUN TEE
VS093

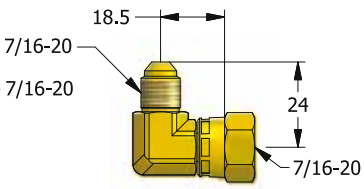


90° SWIVEL NUT ELBOW
VS090

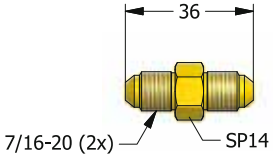


UNION
VTH10

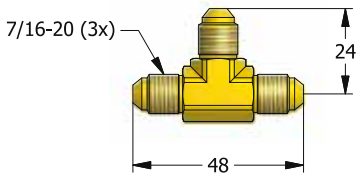


UNION TEE
VTH93

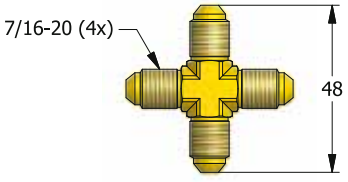


UNION CROSS
VTH94

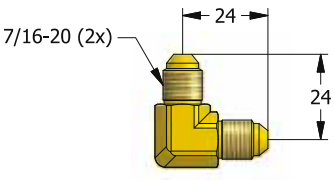


UNION ELBOW
VTH90

22/03/2011

# CHARGING METHOD

GAS SPRING for fitting system type can be charged through the charging plug on PANEL.

For self-contained type, checking pressure and charging gas can be done by PRESSURE TESTER.

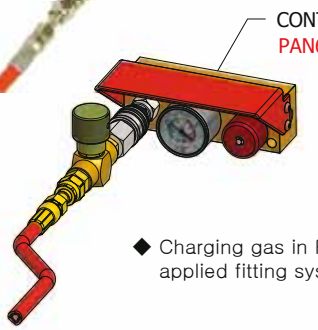


◆ Charging gas in PAN6 that applied fitting system.

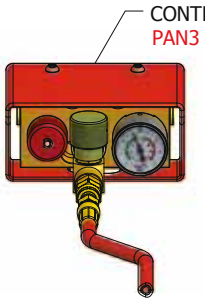


◆ Charging gas in PAN3 that applied fitting system.

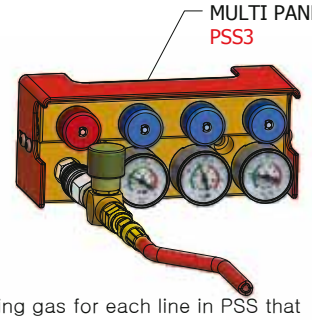


◆ Charging gas for each line in PSS that applied fitting system.

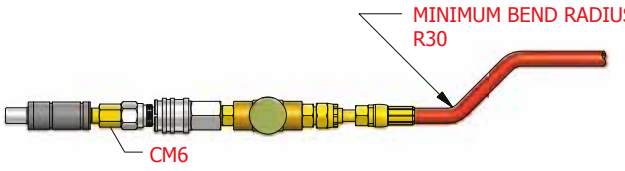


◆ GAS SPRING
TSP0170 ~ 0320
TSM0150

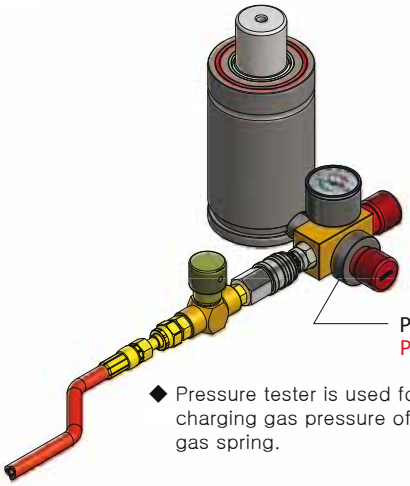


◆ Pressure tester is used for checking and charging gas pressure of self contained gas spring.

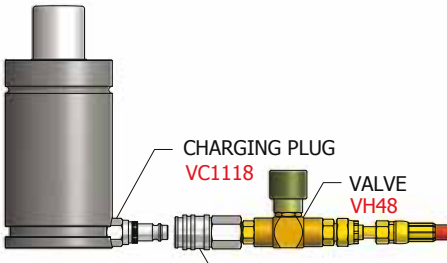


GAS SPRING
TSP0350 ~ TSP9500
TSM,TTM0300 ~ TSM5000
TSS0750 ~ TSS5000
TSL0500 ~ TSL10000

NITROGEN GAS charger (length 3m)
GCH100

CHARGING ADAPTOR

PORT ADAPTOR
CM618

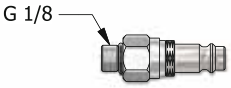


CHARGING PLUG
VC1118

22/03/2011

# PRESSURE DISTRIBUTION TANK

By connection with fitting system, EOC ACCUMULATOR keeps constant pressure level by minimize the difference between initial pressure and final pressure.

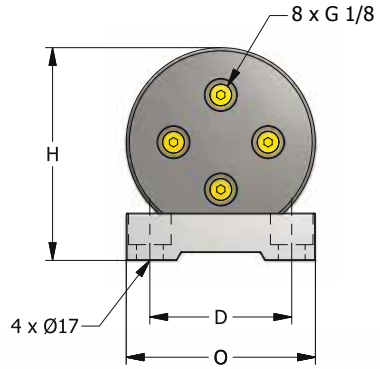


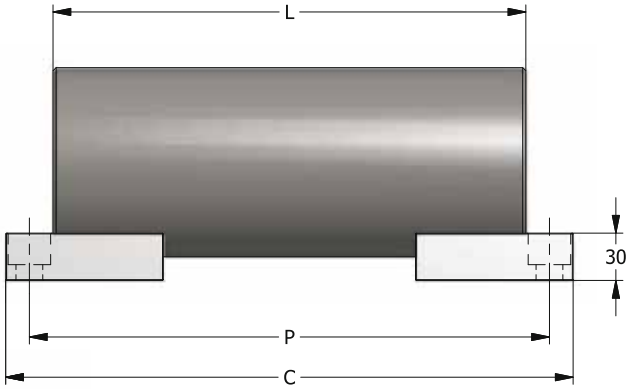


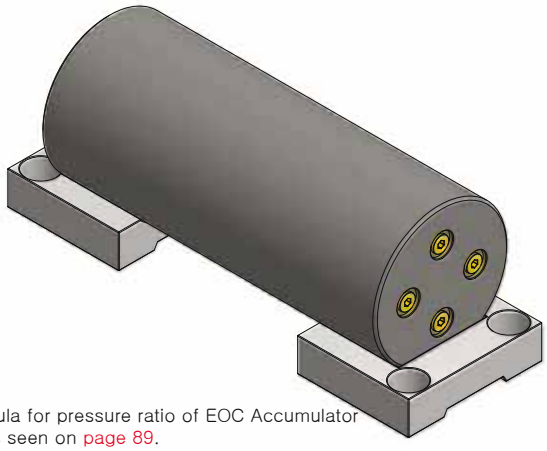

※ The formula for pressure ratio of EOC Accumulator System is seen on page 89.

| DESCRIPTION | VOLUME cm³ | L mm | C mm | P mm | H mm | O mm | D mm |
|---|---|---|---|---|---|---|---|
| TAN050-25 | 1,260 | 300 | 360 | 330 | 115 | 95 | 65 |
| TAN050-50 | 2,510 | 550 | 610 | 580 | | | |
| TAN050-75 | 3,770 | 800 | 860 | 830 | | | |
| TAN080-25 | 1,960 | 300 | 360 | 330 | 135 | 120 | 90 |
| TAN080-50 | 3,920 | 550 | 610 | 580 | | | |
| TAN080-75 | 5,880 | 800 | 860 | 830 | | | |
| TAN125-25 | 3,060 | 310 | 370 | 340 | 165 | 150 | 120 |
| TAN125-50 | 6,130 | 560 | 620 | 590 | | | |
| TAN125-75 | 9,200 | 810 | 870 | 840 | | | |
| TAN210-25 | 5,340 | 310 | 370 | 340 | 215 | 200 | 170 |
| TAN210-50 | 10,680 | 560 | 620 | 590 | | | |

HOW TO SPECIFY

## HOW TO SPECIFY

| TAN | 080-75 |
|---|---|
| Accumulator | Specification |

## ACCUMULATOR USE EXAMPLE

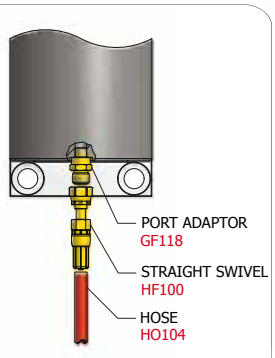


ACCUMULATOR + FITTING CONNECTION

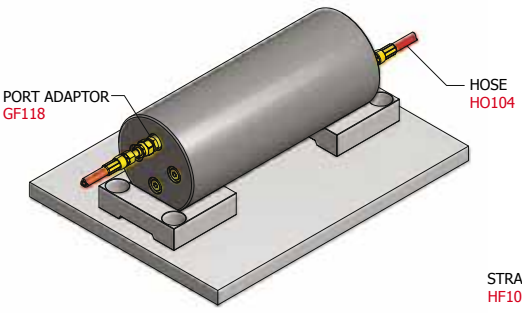


2 PORT USE

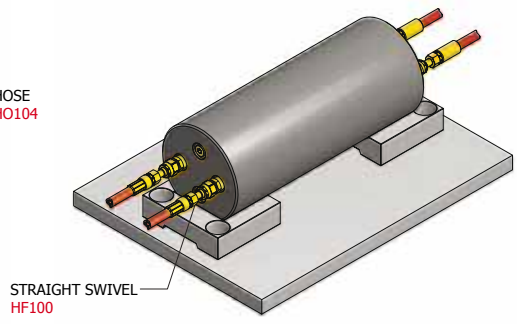


4 PORT USE

22/03/2011

## GF FITTING + HO104 HOSE CONNECTION

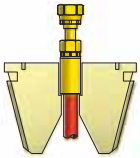

GF FITTING
SWIVEL Compression
Cross-Section View

GF FITTING + HOSE HO104 application

## COMPACT FITTING + HO055 HOSE CONNECTION

COMPACT FITTING
SWIVEL Compression
Cross-Section View

COMPACT FITTING + HOSE HO055 application

◆ Fitting System Type GAS SPRING Example

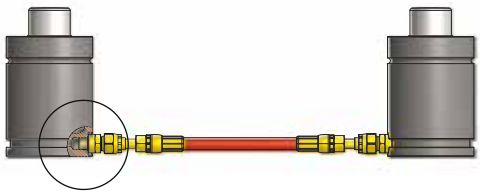

FITTING Combination Cross-Section View

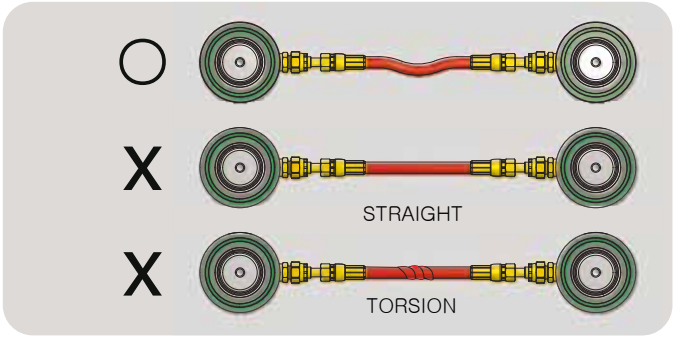


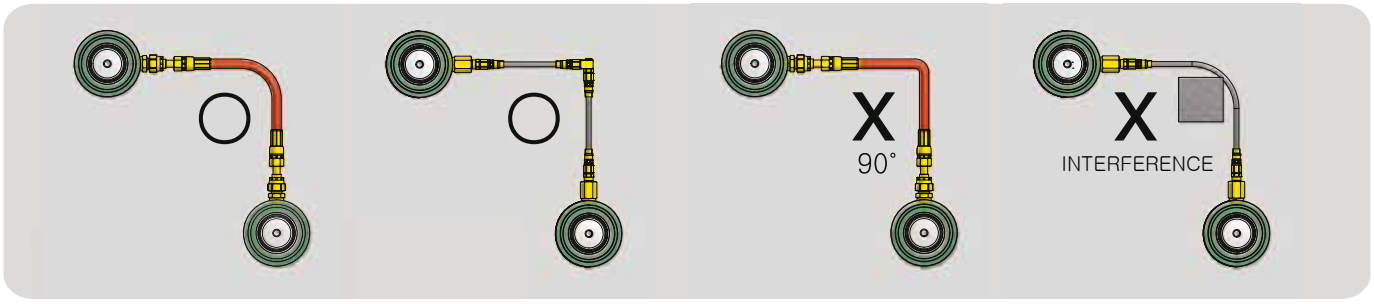


## HOSE CLAMP

Use for fixing hose.

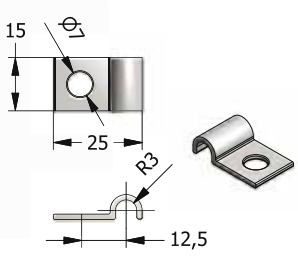


HCL06
HOSE_ HO055 Fixing

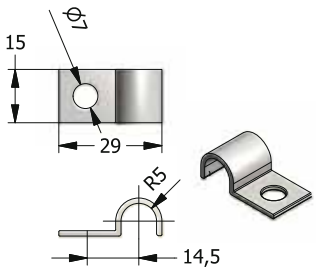


HCL10
HOSE_ HO104 Fixing

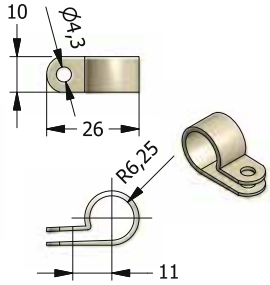


HCL48
HOSE_ HO104 Fixing

22/03/2011

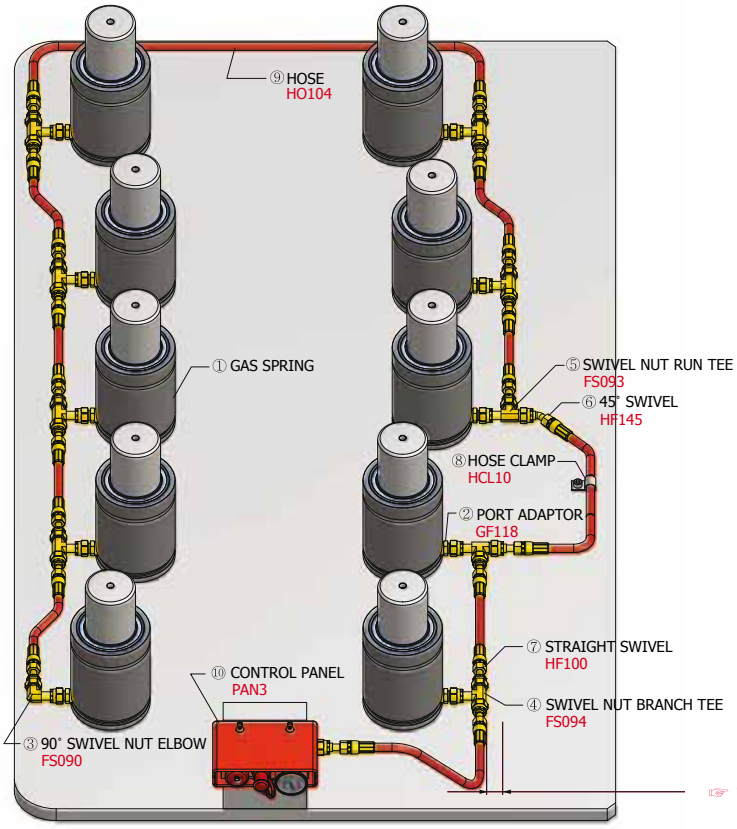


## PAN3 Application Piping Diagram I

| No. | MODEL | STANDARD | QTY. | PAGE |
|---|---|---|---|---|
| 1 | GAS SPRING | TSP4200 x 060 | 10 | P26 |
| 2 | PORT ADAPTOR | GF118 | 11 | P79 |
| 3 | 90° SWIVEL NUT ELBOW | FS090 | 1 | P79 |
| 4 | SWIVEL NUT BRANCH TEE | FS094 | 7 | P79 |
| 5 | SWIVEL NUT RUN TEE | FS093 | 2 | P79 |
| 6 | 45° SWIVEL | HF145 | 1 | P79 |
| 7 | STRAIGHT SWIVEL | HF100 | 19 | P79 |
| 8 | HOSE CLAMP | HCL10 | 1 | P83 |
| 9 | HOSE | HO104 | 10 | P79 |
| 10 | CONTROL PANEL | PAN3 | 1 | P74 |

☞ Working notice
(GF FITTING Application MODEL)
When you apply Fitting system, secure more than 20mm to avoid tool interference.

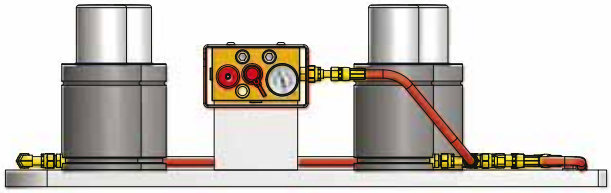

## PSS3 Application Piping Diagram I

| No. | MODEL | STANDARD | QTY. | PAGE |
|---|---|---|---|---|
| 1 | GAS SPRING | TSL1500 x 025-MSA | 2 | P64 |
| 2 | | TSL1500 x 025-MDA | 2 | P64 |
| 3 | | TSL1500 x 025 | 2 | P64 |
| 4 | PORT ADAPTOR | GF118 | 9 | P79 |
| 5 | 90° SWIVEL NUT ELBOW | FS090 | 2 | P79 |
| 6 | UNION TEE | HTH93 | 1 | P79 |
| 7 | SWIVEL NUT RUN TEE | FS093 | 2 | P79 |
| 8 | STRAIGHT SWIVEL | HF100 | 8 | P79 |
| 9 | 90° SWIVEL | HF190 | 2 | P79 |
| 10 | 45° SWIVEL | HF145 | 4 | P79 |
| 11 | HOSE | HO104 | 7 | P79 |
| 12 | MULTI PANEL | PSS3 | 1 | P76 |

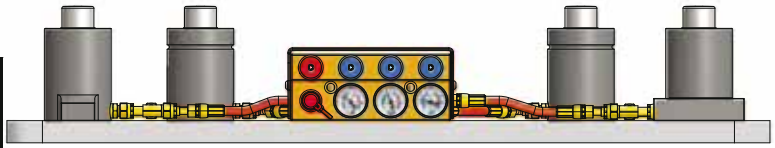

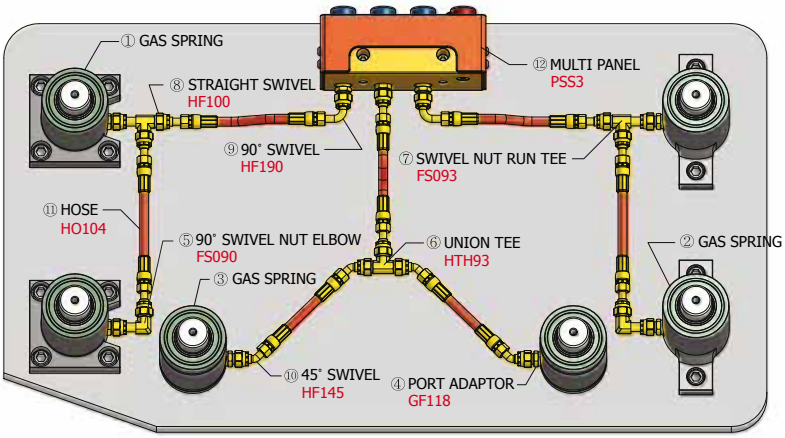


22/03/2011

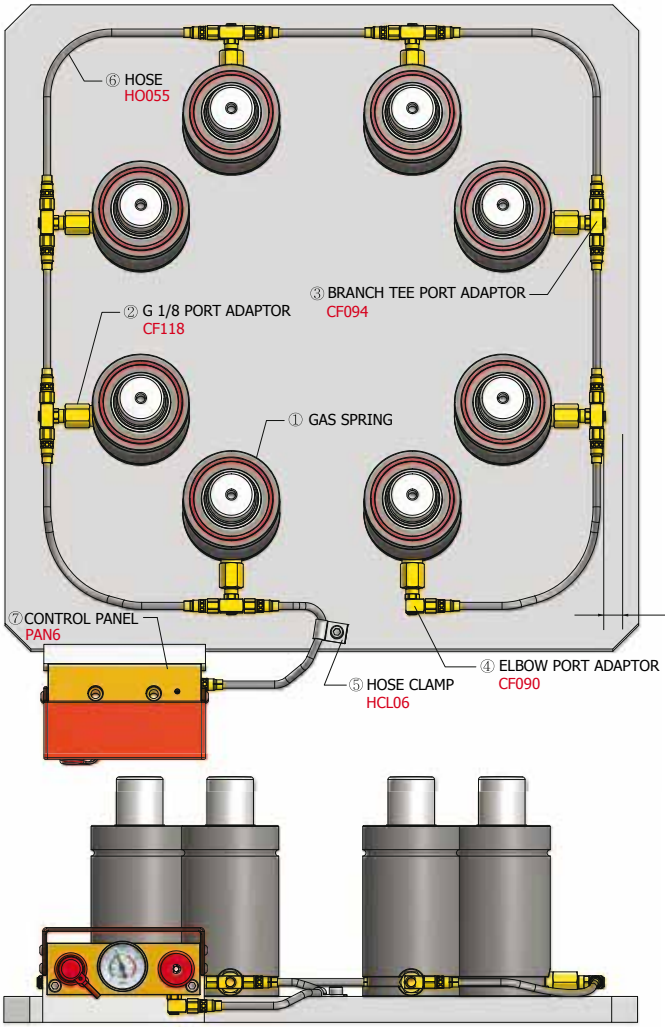


## PAN6 Application Piping Diagram I

| No. | MODEL | STANDARD | QTY. | PAGE |
|---|---|---|---|---|
| 1 | GAS SPRING | TSM1500 x 038 | 8 | P42 |
| 2 | G 1/8 PORT ADAPTOR | CF118 | 8 | P78 |
| 3 | BRANCH TEE PORT ADAPTOR | CF094 | 7 | P78 |
| 4 | ELBOW PORT ADAPTOR | CF090 | 2 | P78 |
| 5 | HOSE CLAMP | HCL06 | 1 | P83 |
| 6 | HOSE | HO055 | 8 | P78 |
| 7 | CONTROL PANEL | PAN6 | 1 | P75 |

☞ Working notice
(COMPACT FITTING Application MODEL)
When you apply Fitting system, secure more than 15mm to avoid tool interference.

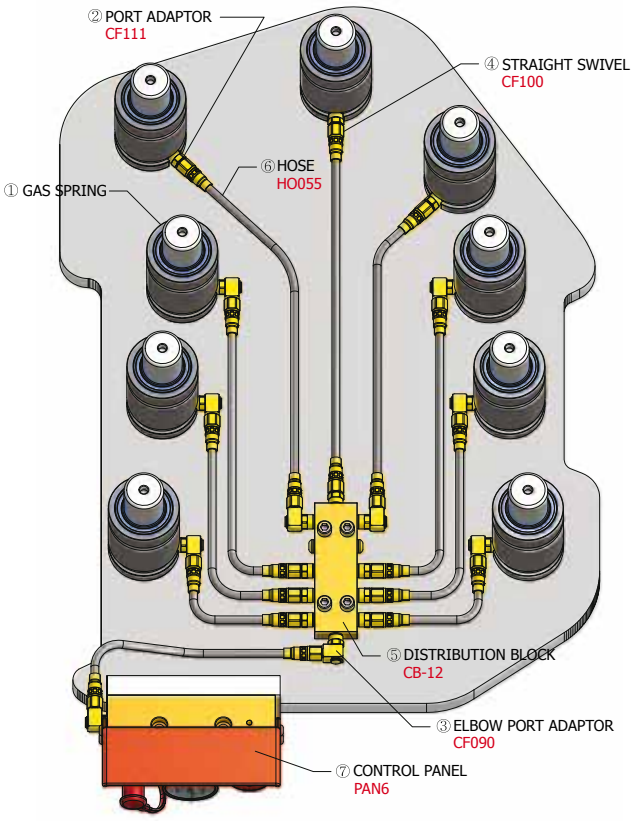


## PAN6 Application Piping Diagram II

| No. | MODEL | STANDARD | QTY. | PAGE |
|---|---|---|---|---|
| 1 | GAS SPRING | TSP1000 x 030 | 9 | P20 |
| 2 | PORT ADAPTOR | CF111 | 10 | P78 |
| 3 | ELBOW PORT ADAPTOR | CF090 | 10 | P78 |
| 4 | STRAIGHT SWIVEL | CF100 | 20 | P78 |
| 5 | COMPACT 12 BLOCK | CB-12 | 1 | P77 |
| 6 | HOSE | HO055 | 10 | P78 |
| 7 | CONTROL PANEL | PAN6 | 1 | P75 |

## KARRYKRIMP

*HK8201*

*Standard) HK8201*

- HO104 Hose & Swivel hose adaptor presses
- KARRYKRIMP can combine HO104 Hose & Swivel hose adaptor Hose.

## ASSEMBLING TOOL

*MARK10*

*Standard) MARK10*

- HO055 Hose & Straight Swivel presses
- Assembling tool can combine HO055 Hose and Straight Swivel.
- It is easy to carry, so suitable for moving around work place.

## GAS BOOSTERS

*S86JN*

*Standard) S86JN*

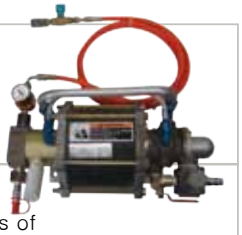

- Gas booster increases gas pressure ratio to user's setting during charging gas of fitting

  Pressure ratio (30:1)

## HOSE ASSEMBLY

*GCH100(Length:3m)*

*Standard) GCH100*

- Charging Hose System

## HOSE SCISSORS

*HS10*

*Standard) HS10*

- Hose Cutter

## PRESSURE TESTER

*PT118 (G1/8 type)*
*PT716 (7/16 type)*
*Standard) PT118*

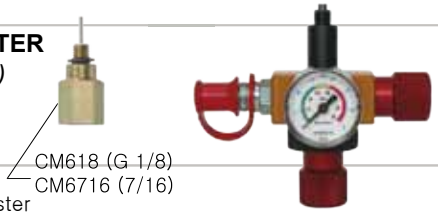


- Cross Pressure Tester
- Portable pressure tester is used for controlling and charging pressure of self contained type.
- Please select correct model which fits to product.

## CHARGING COUPLING

*VC55*

*Standard) VC55*

- Charging Female Coupling
- It combined with charging plug to charge gas.

## CHARGING PLUG

*VC1118 (G 1/8)*
*VC11716 (7/16)*
*Standard) VC1118*

- Charging Male Plug
- It combined with charging coupling to charge gas.

22/03/2011

## COMPACT LOAD CELL

*CLC_____*
*Standard*

*Standard) CLC1500*

- Gas pressure gauge
- It measures accurate pressure by placing on product.
- Please select correct model which fits to product

- Unit
  - bar (0~350)
  - Mpa (0~35)

## DIGITAL LOAD CELL

*DLE10*

*Standard) DLE10*

- Digital load checking gauge
- It measures load by placing gas spring on the gauge.

- Load Range
  - 0 ~ 10t (0 ~1 00kN)

## VALVE TIGHTEN TOOL

*VTT26R*

*Standard) VTT26R*

- Torque Driver
- Used for assembly or disassembly of valve.
- Avoiding break a valve by Over Torque.

## VALVE CONTROL TOOL

*VCT06(M6 type)*
*VCT18(G 1/8 type)*
*Standard) VCT06*

- Gas Control Tool
- Used for exhausting gas during disassembly gas spring.
- Please select correct model which fits product.

## STOPRING REMOVAL TOOL

*SRT42 (0350~4200)*
*SRT50 (5000~10000)*
*Standard) SRT42*

- Used to remove gas during disassembly gas spring.
- Stopring can be removed by stopring removal tool after using valve control tool.
- Please select correct model which fits product.

## T-REMOVAL TOOL

*TRT06(M6 type)*
*TRT08 (M8 type)*
*Standard) TRT06*

- Gas Spring Disassembly Tool
- Sequence
  ① Remove the gas to valve control tools
  ② Remove the ring by using the Stopring Removal Tool.
  ③ Isolates the Rod Ass'y from the cylinder using the T-Removal Tool.
- Please select correct model which fits product.

## PRESSURE GAUGE

*GAU350*

*Standard) GAU350*

- Compact Pressure Gauge

- Unit
  - bar (0~350)
  - Mpa (0~35)

## VALVE

*CV100*

*Standard) CV100*

- Check Valve
- When you change fitting system type gas spring to self-contained type, you can assemble or disassemble with valve tighten tool.

22/03/2011

Self-contained type

CHANGE

Fitting System type

Self contained gas spring and fitting system type gas spring can be switched each other when condition of work changes.

Self-contained type (M6 PORT) → Fitting System type

1.1
Self-contained type
Assembly Drawing
Preparing for switch to fitting system type

1.2
Remove plug from cylinder by using wrench.

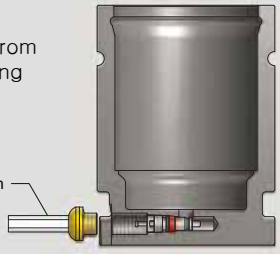


1.3
Exhaust gas by pushing valve with Valve Control Tool.

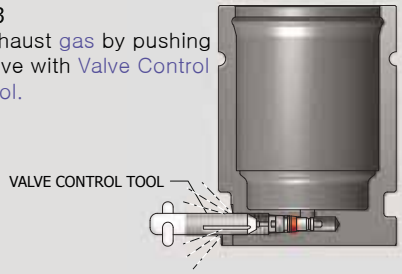


1.4
Remove valve by using Valve Tighten Tool.

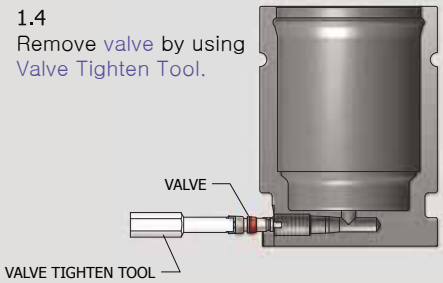


1.5
Install Port Adaptor on Cylinder.
Now, Ready for fitting system

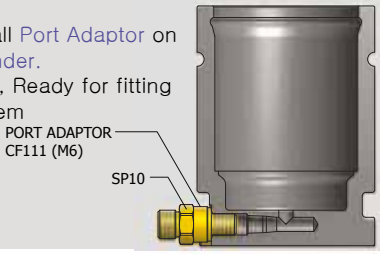


## APPLICATION MODEL

TSP4200
TSP6600
TSP9500
TSM1500
TSM3000
TSM5000
TSS0750
TSS1500
TSS3000
TSS5000
TSL0500
TSL0750
TSL1500
TSL3000
TSL5000
TSL7500
TSL10000

Fitting system type ↔ Self-contained type
(G 1/8, 7/16 PORT)
2.1 ~ 2.5 reference

TSP0350
TSP0500
TSP0750
TSP1500
TSP2400
TSM0300
TSM0500
TSM0750

Self-contained type ↔ Fitting system type
(M6 PORT)
1.1 ~ 1.5 reference

### PLUG
### PORT ADAPTOR Removal Tool

1.G 1/8
7/16-20 → 5mm wrench

M6 → 4mm wrench

2.M6 PORT ADAPTOR
→ (SPANNER 10mm)

3.G 1/8
7/16 PORT ADAPTOR
→ (SPANNER 16mm)

### ※ Task Note

1.4 Make sure there is no residual gas left in the inside of cylinder before opening the valve. Then, remove the valve using valve

1.5 Make sure the O'ring places inside of the port adaptor before installation of cylinder.

1.4 Fasten the valve using valve tighten tool by torque of 9.8kgf · cm.

1.4 Make sure the O'ring places inside of plug before installation of cy linder.

Fitting System type (G 1/8, 7/16 PORT) → Self-contained type (M6 PORT)

2.1
Fitting system type
Assembly Drawing
Preparing for switch to Self-contained type

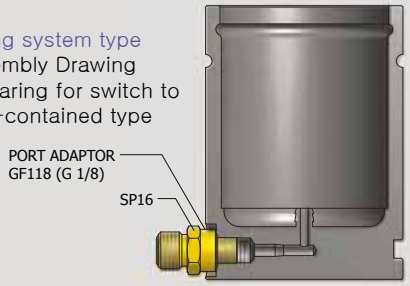


2.2
Remove Port Adaptor from cylinder.

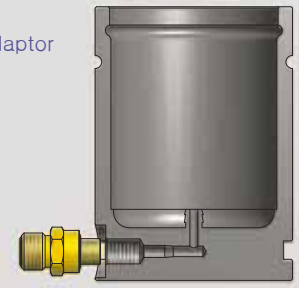

2.3
Install valve by using Valve Tighten Tool.

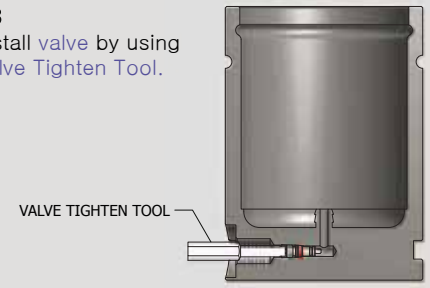


2.4
Install plug by using wrench.

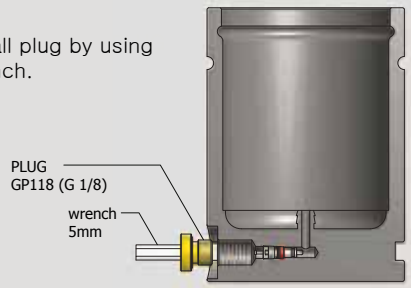


2.5
Completing plug combination.
Now, ready for self-contained type

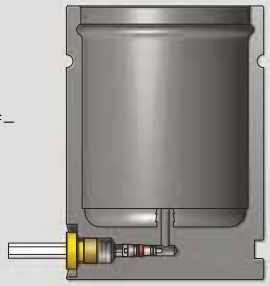

22/03/2011

## Calculation of Pressure Ratio

$$F = \frac{Vg}{Vg - S \times R}$$

EX) What is the pressure ratio when 50mm of stroke is applied with EOC GAS SPRING TSS5000 x 60?

$$1.45 = \frac{533.8}{533.8 - 5 \times 33.1}$$

F = Pressure Ratio
Va = Volume of Accumulator(㎤)
Vg = Volume of Gas Spring(㎤)
n = Numbers of Gas Spring
S = Real Used Stroke(㎝)
R = Cross Section of piston Rod(㎠)

## Calculation of Accumulator applied

$$F = \frac{Va + Vg \times n}{Va + (Vg - S \times R) \times n}$$

EX) What is pressure ratio when 50mm of stroke is applied with 12 of EOC GAS SPRING TSS 5000 x 60 and 2 of Accumulators TAN080-75?

$$1.12 = \frac{(5{,}880 \times 2) + 533.8 \times 12}{(5{,}880 \times 2) + (533.8 - 5 \times 33.1) \times 12}$$

## Initial force gradient due to temperature

Volume increases as temperature increases, and volume decreases as temperature decreases. (PV = RT)

With constant pressure volume of any gas increases 1/273 by increment of 1℃ from 0℃ of temperature (Charles's Law).

P = Pressure
V = Volume
R = Gas Constant
T = Temperature

$\frac{V_1}{T_1} = \frac{V_2}{T_2} = K$, $\frac{P_1}{T_1} = \frac{P_2}{T_2}$ $T_1$ = Initial temperature $T_2$ = Final temperature

Pressure is proportional to the force $\frac{F_1}{T_1} = \frac{F_2}{T_2} \Rightarrow F_2 = F_1 \times \frac{T_2}{T_1}$

EX) At 20℃, what is force of gas spring if temperature of gas spring (initial force of 7,350N) is increased by 50℃ during operation?

absolute (K) = ℃ + 273

$F_1$ = 7,350N, $T_1$ = 273 + 20℃ = 293°K, $T_2$ = 273 + 50℃ = 323°K

$F_2 = 7{,}350 \times \frac{323}{293} = 8{,}100N$

22/03/2011

## Calculation of Pressure Ratio

### ※ Weight conversion of Nitrogen gas

$P \times V = nRT$ (Ideal gas equation)

$$n = \frac{RV}{RT}$$

P = Pressure
V = Volume
n = Number of mol
R = Ideal gas constant
T = Absolute temperature

※ Molecular weight of Nitrogen M = 28.0134
Volume of Nitrogen gas 1mol = 22.4 Liter

EX) When you apply fitting system with 6 of EOC GAS SPRING TSM1500 x 60 and 10 of TSM5000 x 80, what is amount of nitrogen gas to be charged?

Specifications : Nitrogen gas charging pressure 120bar 35℃)
Cyilnder Volume (40.1 Liter)

Standard : Volume of TSM1500 x 60 = 205.6 ㎤
Volume of TSM1500 x 80 = 675.1㎤ Charging Pressure: 150 bar (20℃)

Sol.1) $$\frac{120 \times 10^5 \times 40}{8314 \times (35 + 273) \times 1000} = 0.18745 \text{ kmol}$$

= 0.18745 (Number of mol) × 28.0134 (Molecular Weight of Nitrogen) = 5.25 kg

Sol.2) $$\frac{30 \times 10^5 \times 40}{8314 \times (35 + 273) \times 1000} = 0.04686 \text{ kmol}$$

= 0.04686 (Number of mol) × 28.0134 (Molecular Weight of Nitrogen) = 1.31 kg

☞ 5.25 − 1.31 = 3.94 kg (actually using gas)

Ex) When you apply fitting system with 6 of EOC GAS SPRING TSM1500 x 60 and 10 of TSM5000 x 80, what is amount of nitrogen gas to be charged?

Sol.) 205.6 $cm^3$ × 6 + 675.1$cm^3$ × 10 =7984.6$cm^3$ =7.98 liter

$$n = \frac{150 \times 10^5 \times 7.98}{8314 \times (20 + 273) \times 1000} = 0.04914 \text{ kmol}$$

= 0.04914 (Number of mol) × 28.0134 (Molecular Weight of Nitrogen) = 1.38 kg

= If amount of charge in fitting line and Panel and actual using gas are considered as 50%, 40.1 Liter bomb can use 1.4 times with each 7.98Liter.

22/03/2011

# TSP Series

## XTRA HIGH POWER

Ex.MODEL TSP1000 X 050

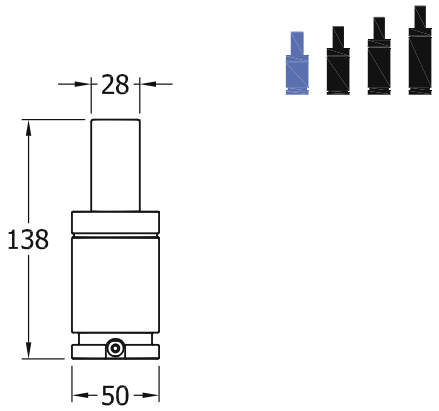


| Model | Stroke (mm) | Rod Φ(mm) | Cylinder Φ(mm) | Initial Force (N) |
|---|---|---|---|---|
| TSP0170 | 7~125 | 11 | 19 | 1700 |
| TSP0320 | 7~125 | 15 | 25 | 3200 |
| TSP0350 | 10~125 | 16 | 32 | 3600 |
| TSP0500 | 10~125 | 20 | 38 | 4700 |
| TSP0750 | 10~125 | 25 | 45 | 7400 |
| TSP1000 | 13~125 | 28 | 50 | 9200 |
| TSP1500 | 13~125 | 36 | 63 | 15000 |
| TSP2400 | 15~125 | 45 | 75 | 24000 |
| TSP4200 | 15~125 | 60 | 95 | 42000 |
| TSP6600 | 15~125 | 75 | 120 | 66000 |
| TSP9500 | 20~125 | 90 | 150 | 95000 |

# TSM Series

## COMPACT TYPE

Ex.MODEL TSM0750 X 050

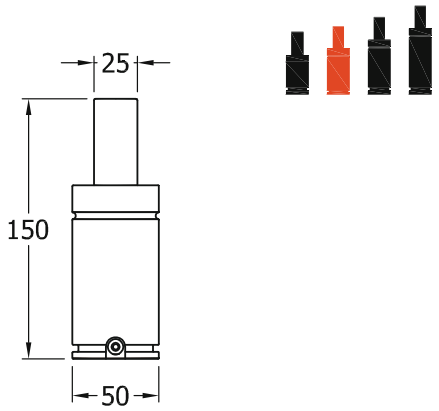


| Model | Stroke (mm) | Rod Φ(mm) | Cylinder Φ(mm) | Initial Force (N) |
|---|---|---|---|---|
| TSM0150 | 10~80 | 12 | 25 | 500~2000 |
| TSM0300 | 10~125 | 16 | 38 | 3000 |
| TSM0500 | 10~125 | 20 | 45 | 4700 |
| TSM0750 | 10~125 | 25 | 50 | 7350 |
| TSM1500 | 10~200 | 36 | 75 | 15000 |
| TSM3000 | 13~200 | 50 | 95 | 29300 |
| TSM5000 | 13~200 | 65 | 120 | 49700 |

# TSS Series

## TSS STANDARD

Ex.MODEL TSS0750 X 050

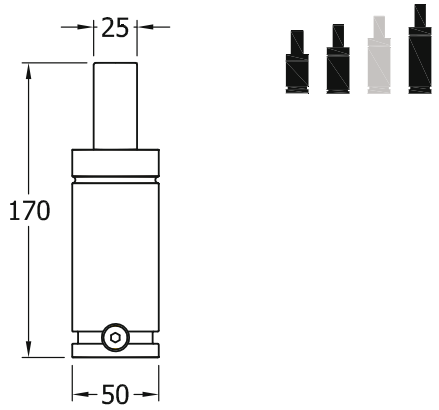


| Model | Stroke (mm) | Rod Φ(mm) | Cylinder Φ(mm) | Initial Force (N) |
|---|---|---|---|---|
| TSS0750 | 10~200 | 25 | 50 | 7350 |
| TSS1500 | 10~300 | 36 | 75 | 15000 |
| TSS3000 | 10~300 | 50 | 95 | 29300 |
| TSS5000 | 10~300 | 65 | 120 | 49700 |

# TSL Series

## ISO STANDARD

Ex.MODEL TSL0750 X 050

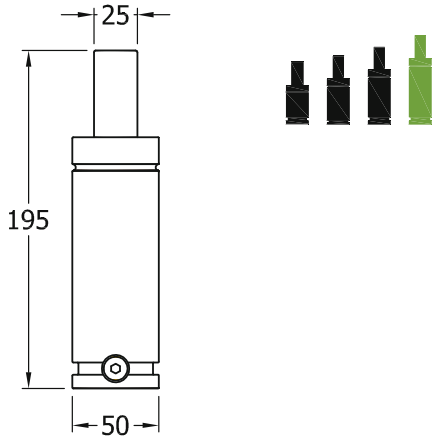


| Model | Stroke (mm) | Rod Φ(mm) | Cylinder Φ(mm) | Initial Force (N) |
|---|---|---|---|---|
| TSL0500 | 10~125 | 20 | 45 | 4700 |
| TSL0750 | 10~300 | 25 | 50 | 7350 |
| TSL1500 | 10~300 | 36 | 75 | 15000 |
| TSL3000 | 10~300 | 50 | 95 | 29300 |
| TSL50000 | 10~300 | 65 | 120 | 49700 |
| TSL75000 | 10~300 | 80 | 150 | 75300 |
| TSL10000 | 10~300 | 95 | 195 | 106200 |

22/03/2011